BAOYU®

宝宇缝纫机®

使用说明
零件样本

OPERATION MANUAL
PARTS BOOK

BML-500 Series
高速绷缝机系列

High Speed
Interlock Sewing Machine

Scan by zhuravli.pro

浙江宝宇缝纫机股份有限公司
ZHEJIANG BAOYU SEWING MACHINE CO.,LTD.

开头语

为您购买500系列绷缝机，我们表示衷心的感谢！

在使用缝纫机之前，请认真阅读此说明书。愿您自始至终爱护并使用本公司的产品。

另外，为使您的缝纫机高效率的使用，此说明书登载了有关日常中检查与安全的注意事项，

在平时，除了对绷缝机进行检查之外，也请您多加注意自身的安全，做到安全使用。这是我们的心愿。

为了安全

对于缝纫机本身及各种装置，我们充分考虑到它的安全性。请遵照基本的操作方法，安全的进行工作。

●拆除为保证安全所设置的装置，零件的情况下使用，是非常危险的，请绝对不要拆除后使用。

●缝纫机在使用时，请不要在缝纫机台板上放置工具及缝纫机时不必要的物品。

●在对缝纫机进行检修、调节、清扫、穿线、换针等时，为防止发生事故，务必请切断电源，在确定即使踩缝纫机踏板，缝纫机也不转动之后，再进行操作。

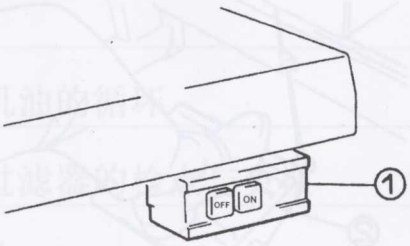

● 在离开缝纫机台时，务必请关掉电源。

● 停电时也请务必关掉电源。

注意

使用离合式马达的情况下，在关掉电源①后因惯性作用会继续旋转。这时如不注意踩动缝纫机踏板②时，缝纫机会突然动作，这是很危险的。

请在关掉电源后，仍继续踩动踏板②，直至缝纫机完全停下来为止。

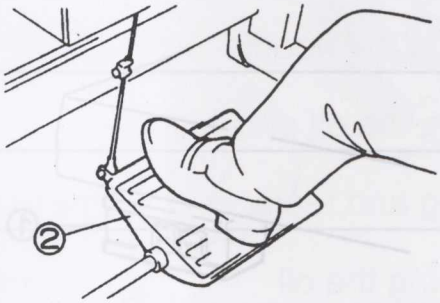

● 为了总是安全地，运转良好的使用缝纫机，日常的点检是不可缺少的，请予以注意。

INTRODUCTION

Thank you very much for purchasing 500 Series machine.
This instruction manual describes daily routine maintenance and safety precautions to keep the machine in the best possible conditions.
Please study this manual very carefully before operating the machine.

CAUTION

OBSERVE THESE SAFETY PRECAUTIONS

Though Sewing Machine takes the utnmost care to produce safe sewing machines and devices, operators should follow these basic safety rules.

- To prevent accidents, do not remove safety devices or parts while operating the machine.
- Do not leave tools or other unnecessary objects on the machine table while operating the machine.
- Before maintenance, adjusting, cleaning, threading or replacing the needle, and to prevent accidents, be sure the power is turned off. Check that the machine will not operate when the pedal is pressed.

Note

In case a clutch type motor is used, it will keep on rotating by inertia after turning off power supply ①. If the machine pedal ② is stepped on. inadvertently, it is dangerous because the machine will move unexpectedly. Keep on steppine on the pedal ② until the machine comes to a stop after turning off power supply.

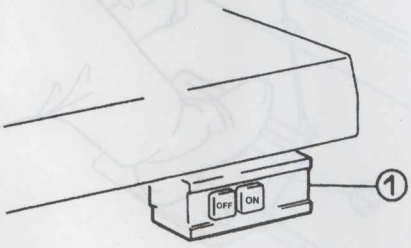

- Turn the power off before leaving the machine table.
- In the event of a power failure, be sure to turn the machine off.
- Check that the machine is securely grounded.

目　录

■ 在使用之前　　页码

○ 供油　1

○ 手动给油　2

○ 给H R装置供油　3

○ 穿线的方法　4

○ 穿线图（2针、3针、4针用）　5

■ 试缝

○ 压脚压力的调节　6

○ 差动比的调节　7

○ 针脚长度的调节　8

○ 线状态的调节　9

■ 使用中的保养

○ 缝纫机的清扫　10

○ 换针　11

○ 检查机油的循环　12

○ 机油过滤器的检点与更换　13

○ 换机油　14

○ 调整标准参数表　15

○ 标准度量零件表　16-28

CONTENS

■ **BEFORE OPERATING** **PAGE**

○Lubrication 1

○Manual lubrication 2

○Filling the HR device with silicon oil 3

○Threading 4

○Threading diagram (2-needle/3-needle/4-needle) 5

■ **TEST SEWING**

○Presser foot pressure 6

○Diff.feed ratio 7

○Stitch length 8

○Thread tention 9

■ **MAINTENANCE DURING USE**

○Cleaning the maching 10

○Replacing the needle 11

○Checking the oil circulation 12

○Checking and replaceing the oil filter 13

○Replaceing the oil 14

○Adjustment Dimensions 15

○Adjustment Dimensions 16-28

供 油
Lubrication

加油量是使油面于H线与L线之间为好。当油量低于L线时，就要及时补充机油。

After filing the oil pan, the oil surface should lie between (H) and (L) lines. Add oil, when the oil surface reaches or goes below(L).

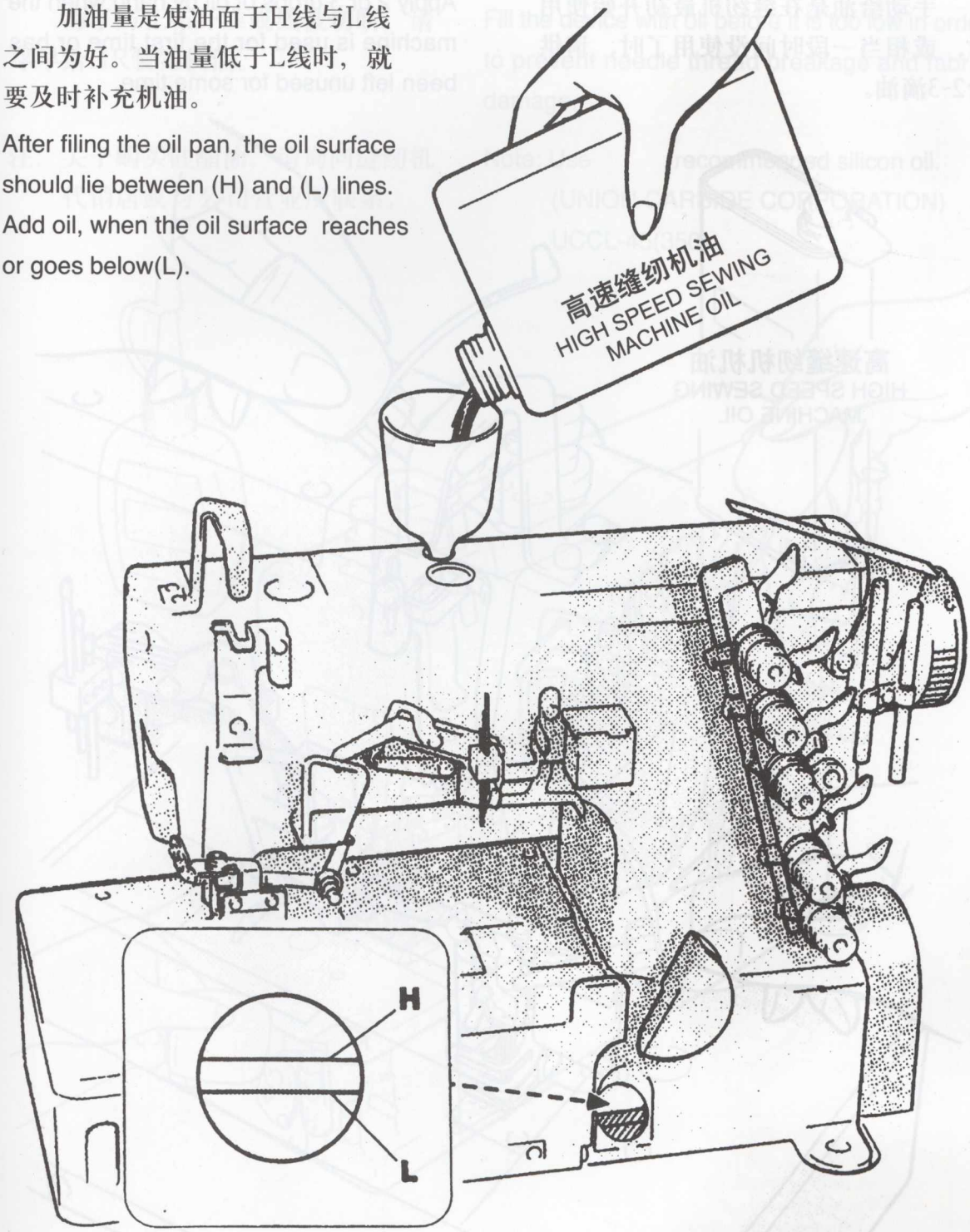

手动给油
Manual lubrication

手动给油是在缝纫机最初开始使用时，或相当一段时间没使用了时，请供给2~3滴油。

Apply 2 or 3 drops of oil by hand when the machine is used for the first time or has been left unused for some time.

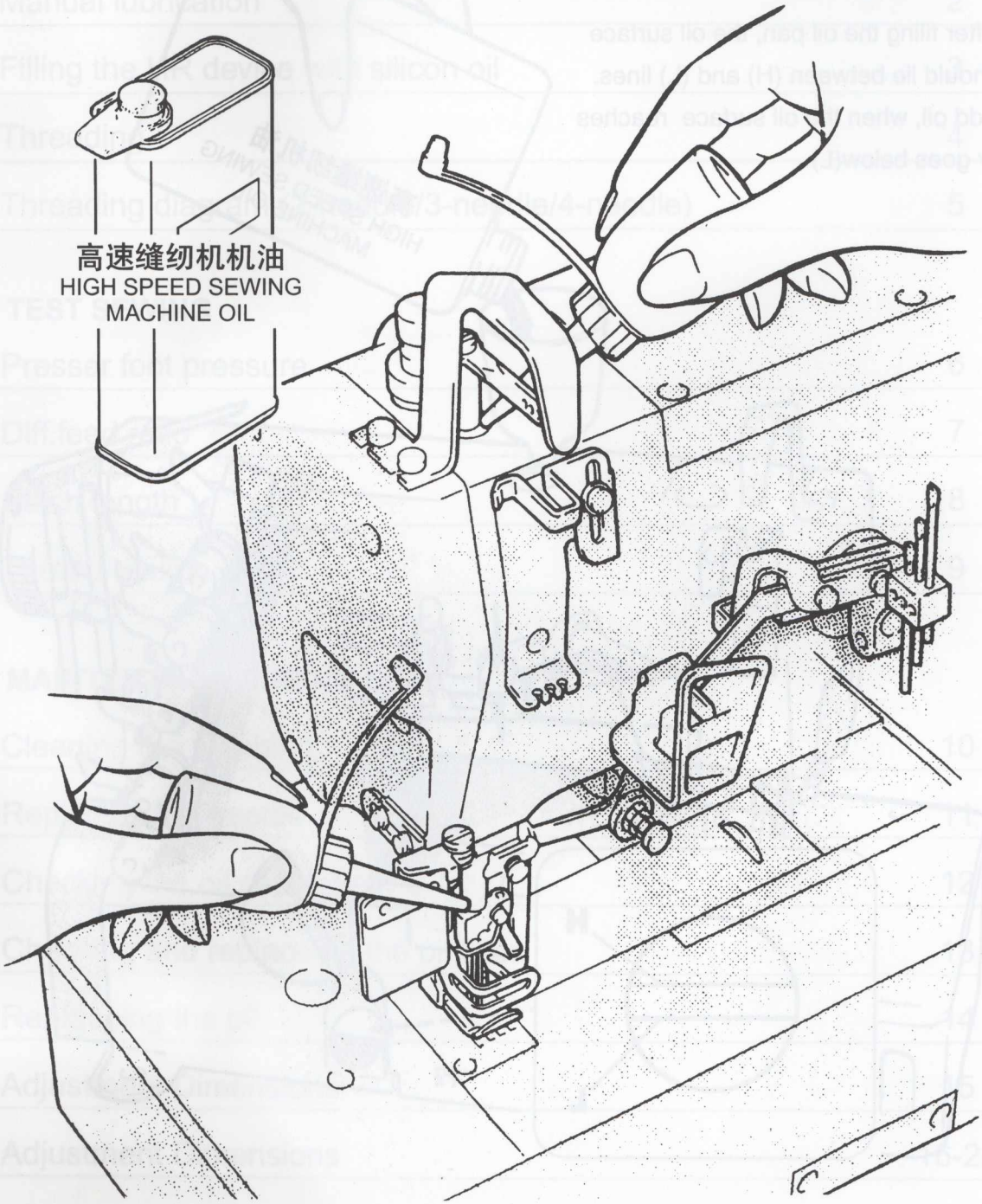

给HR装置供油
Filling the HR device with silicon oil

为了防止布纤维或线被切断，请尽早给HR装置供油。

Fill the device with oil before it is too low in order to prevent needle thread breakage and fabric damage.

注：关于购买硅酯油，请询问缝纫机代销店或与公司营业所联系。

Note: Use recommended silicon oil.
(UNION CARBIDE CORPORATION)
UCCL-45(350)

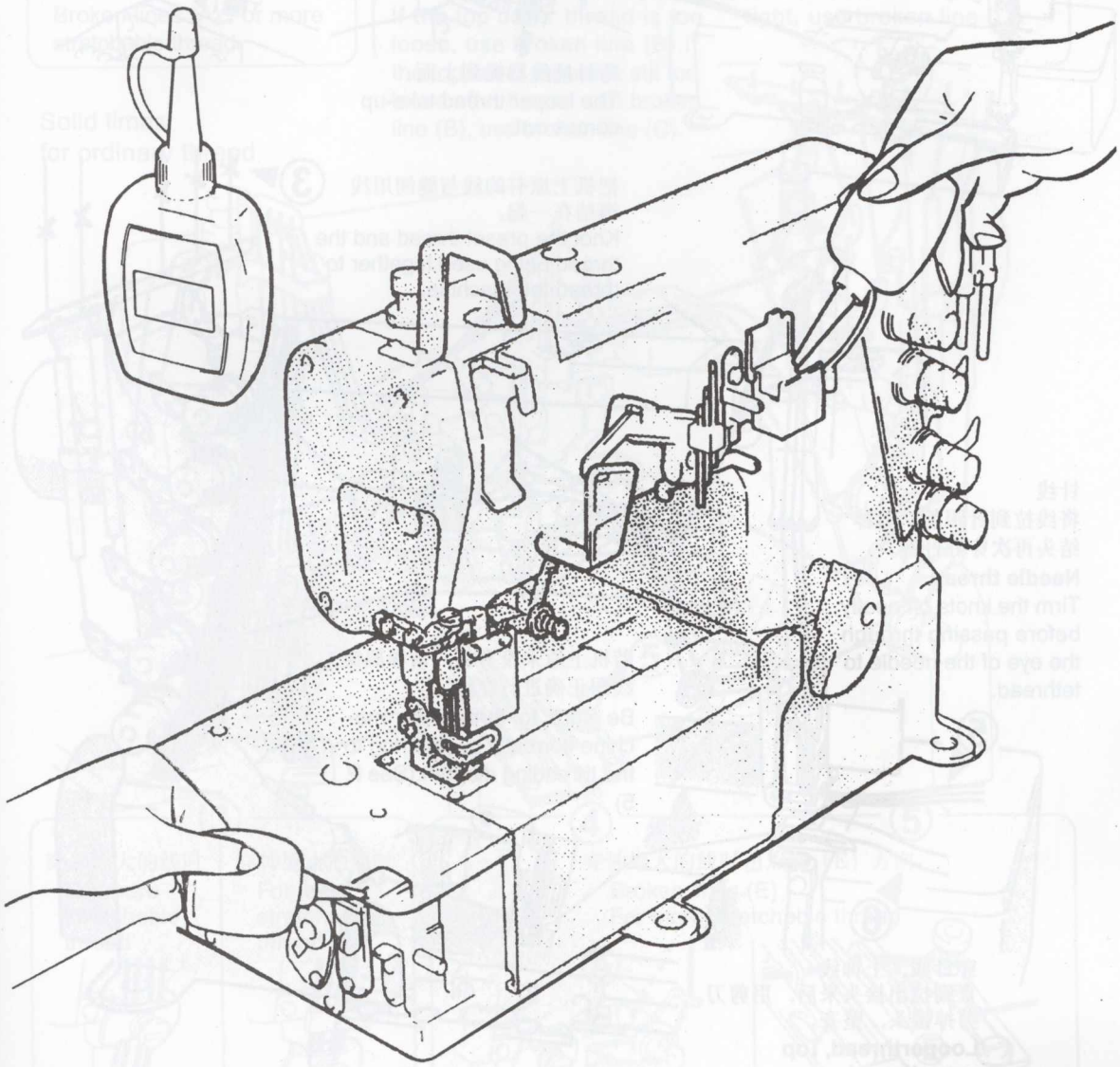

穿线的方法
Threading

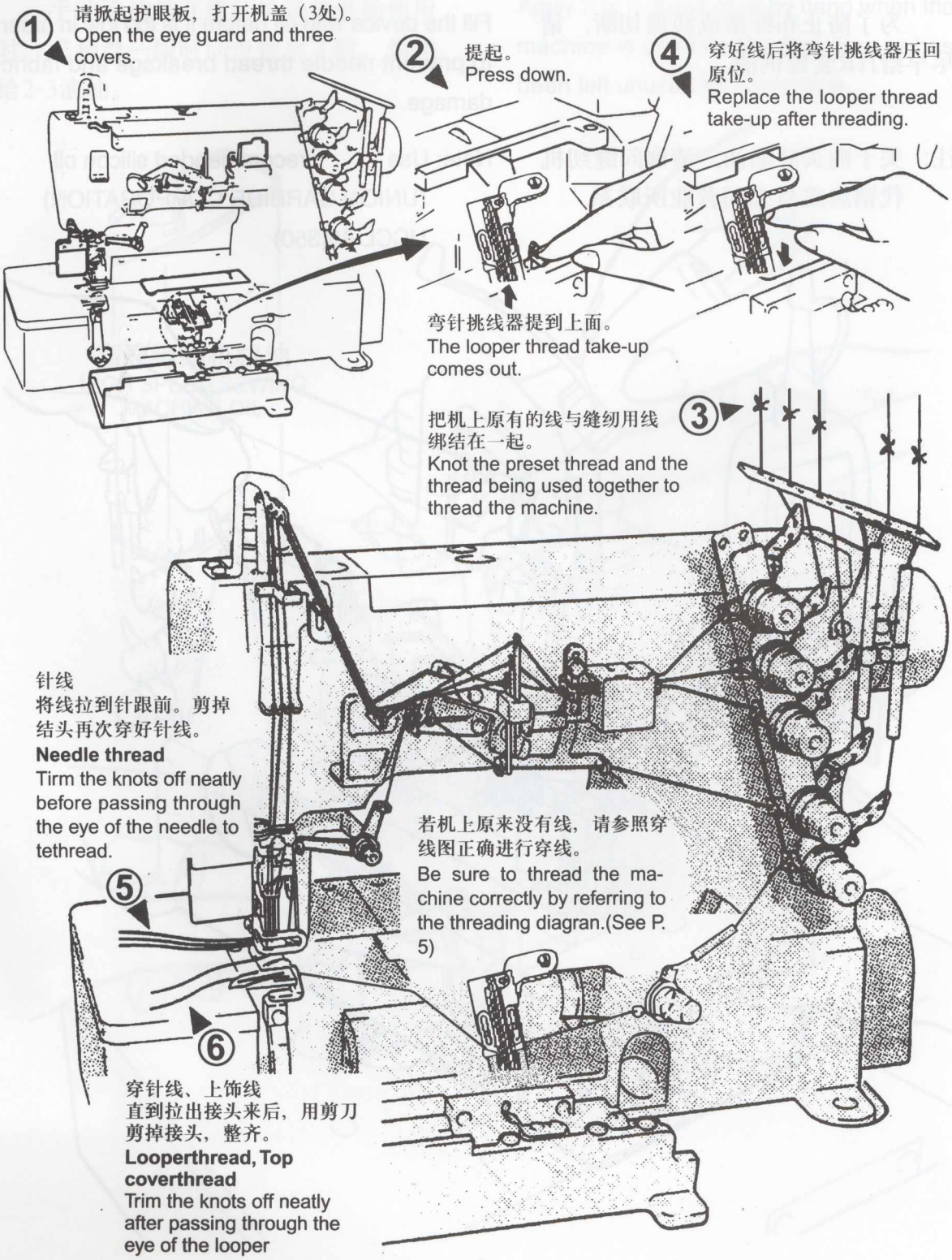

穿线图(2针、3针、4针)
Threading diagram (2.3.-needle)

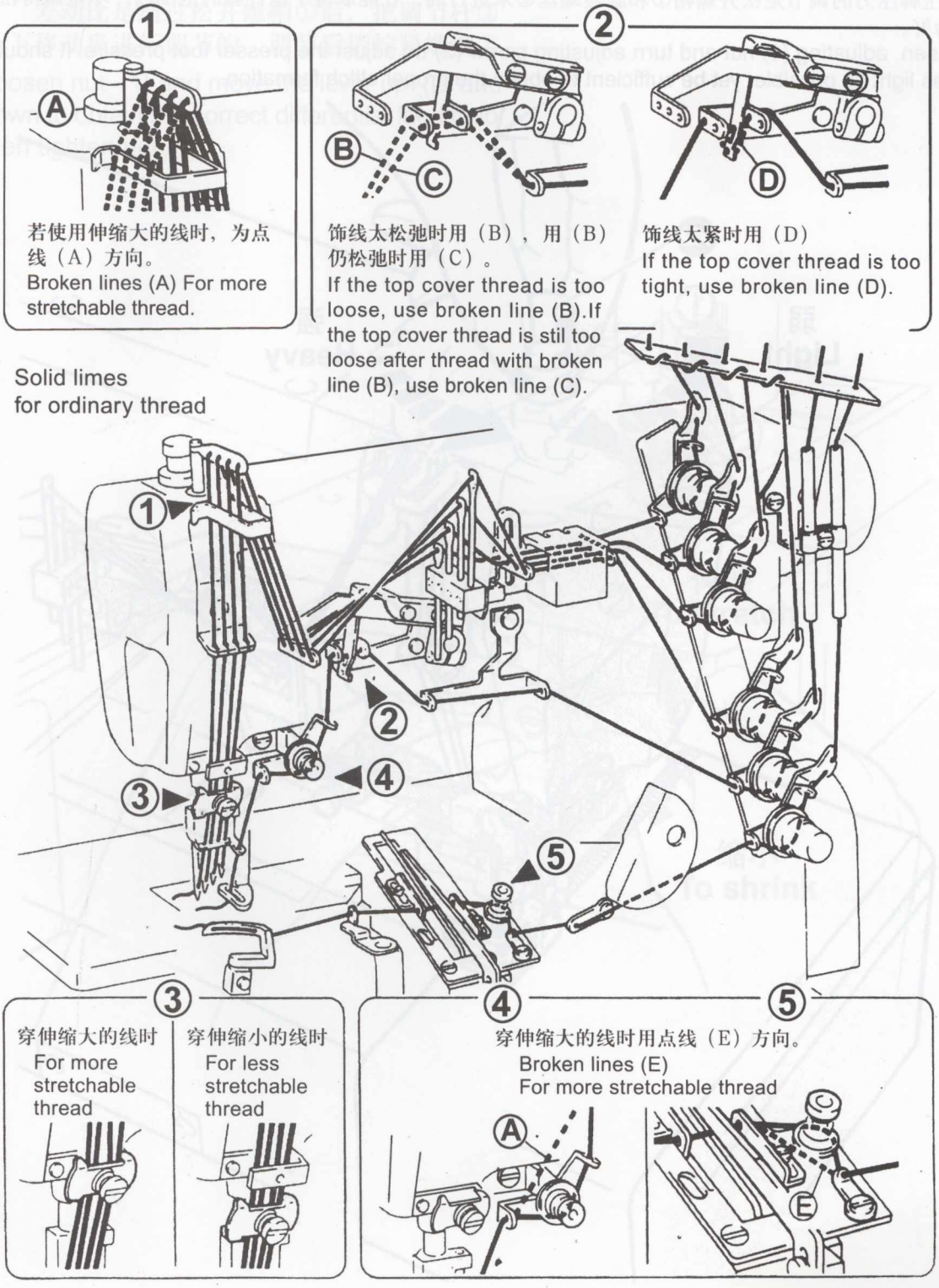

压脚压力的调节
Presser foot pressure

压脚压力的调节是松开螺帽①和旋转螺丝②来进行的。在能取得平稳针脚的范围内，尽量调得松一些为好。

Loosen adjusting (1) nut and turn adjusting screw (2) tto adjust the presser foot pressire. It should be as light as possible, yet be sufficient to obtain the proper stitch formation.

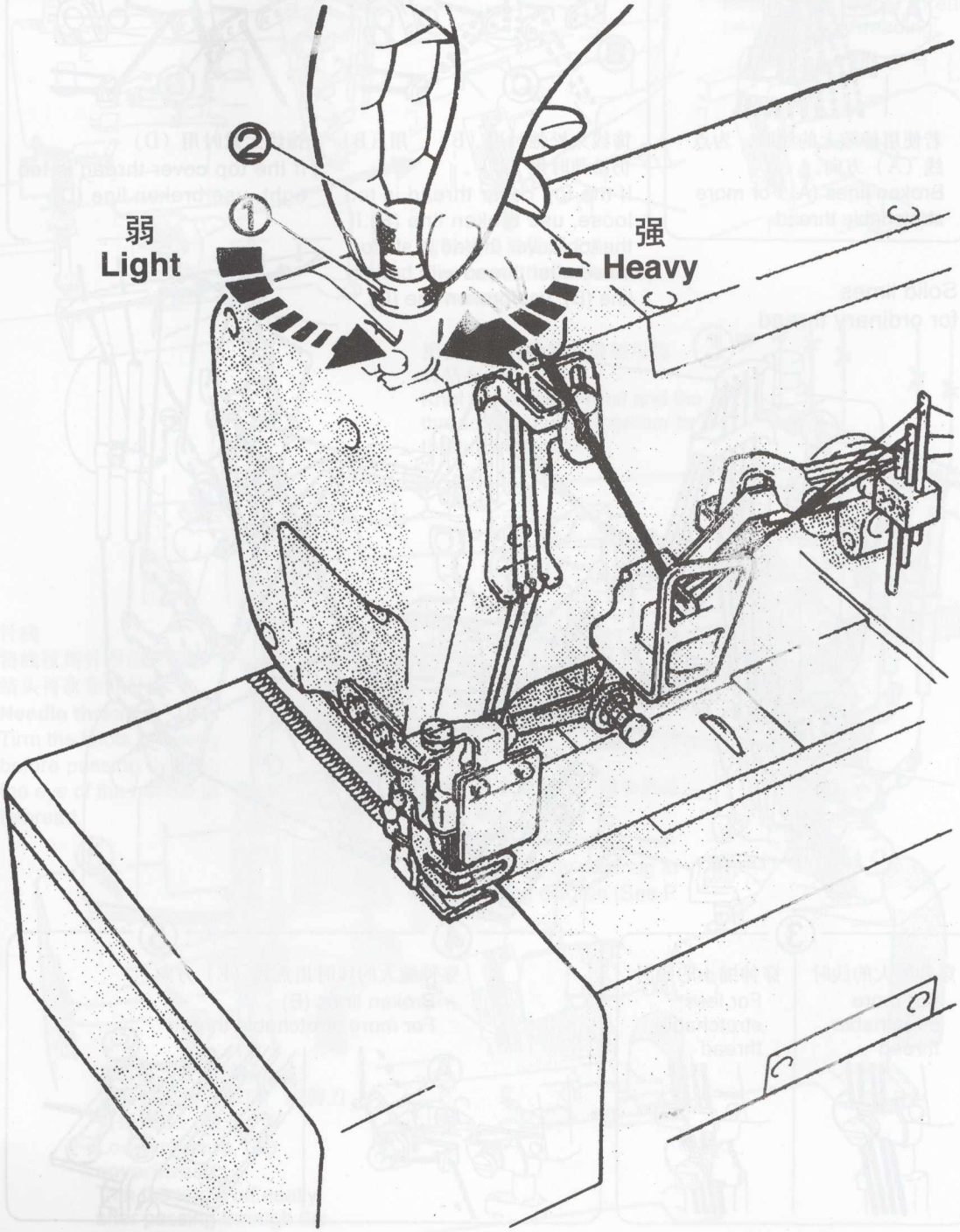

差动比的调节
Diff. feed ratio adjustment

差动比是通过松开螺帽①后，把调节杆②上下移动来进行调节的，调节后请拧紧螺帽①。

Loosen nut (1) and move the lever up (2) and down to obtain the correct differential feed ratio. then tighten nut (1).

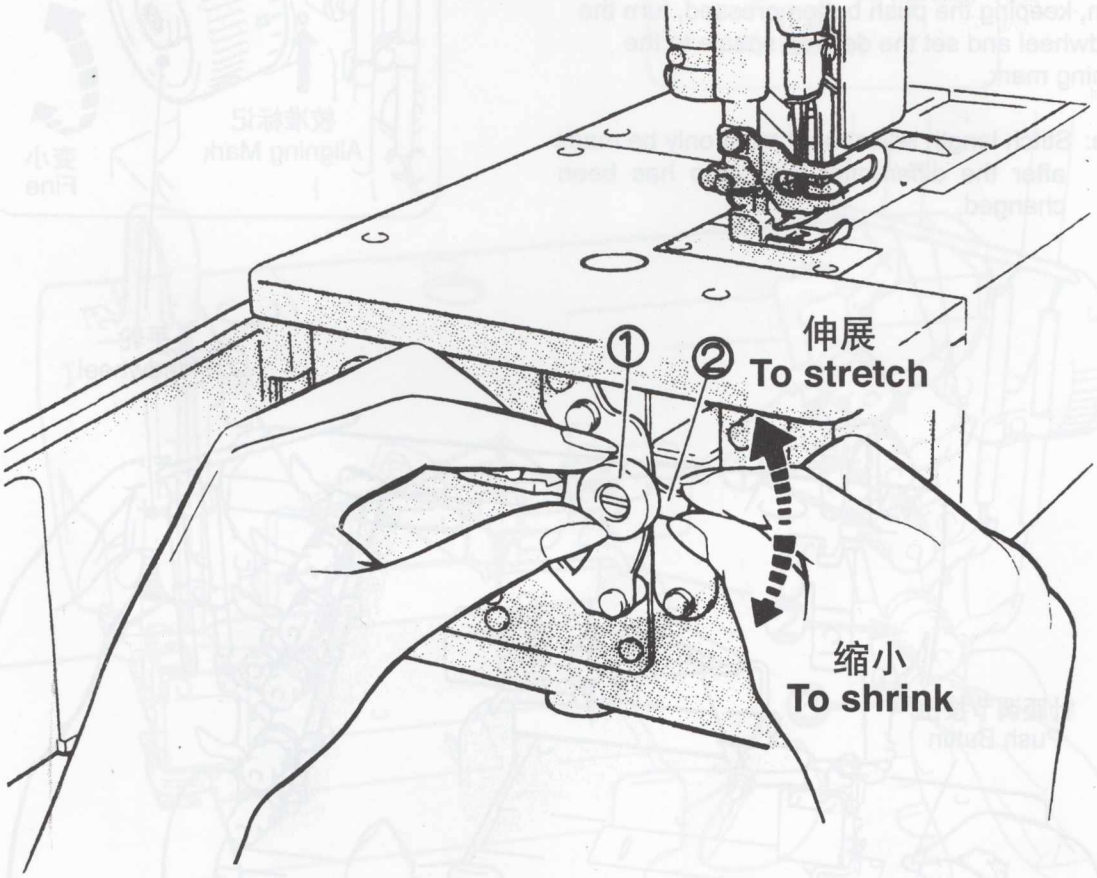

针脚长度的调节
Stitch lengh adjustment

①摁住针距调节按钮，旋转手轮，针距调节按钮会陷进更深处。
②这时边摁住针距调节按钮，边转动手轮，使校准标记对准所希望的数值。

注：针脚长度的调节务必请在调节差动比之后进行。

While pressing the push button. turn the handwheel to seek the postiton at which the push button gose further into the depth.
Then, keeping the push button pressed, turn the handwheel and set the desired scaale to the aligning mark.

Note: Stitch length adjustment must only be made after the differential feed ratio has been changed.

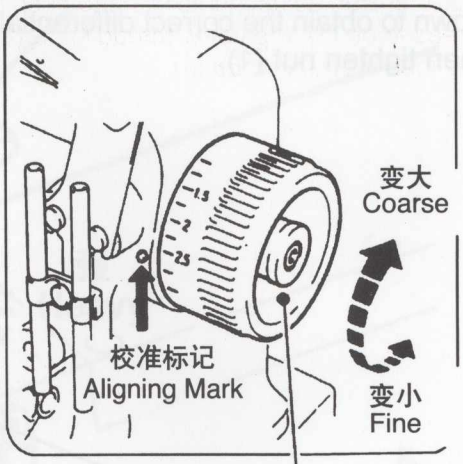

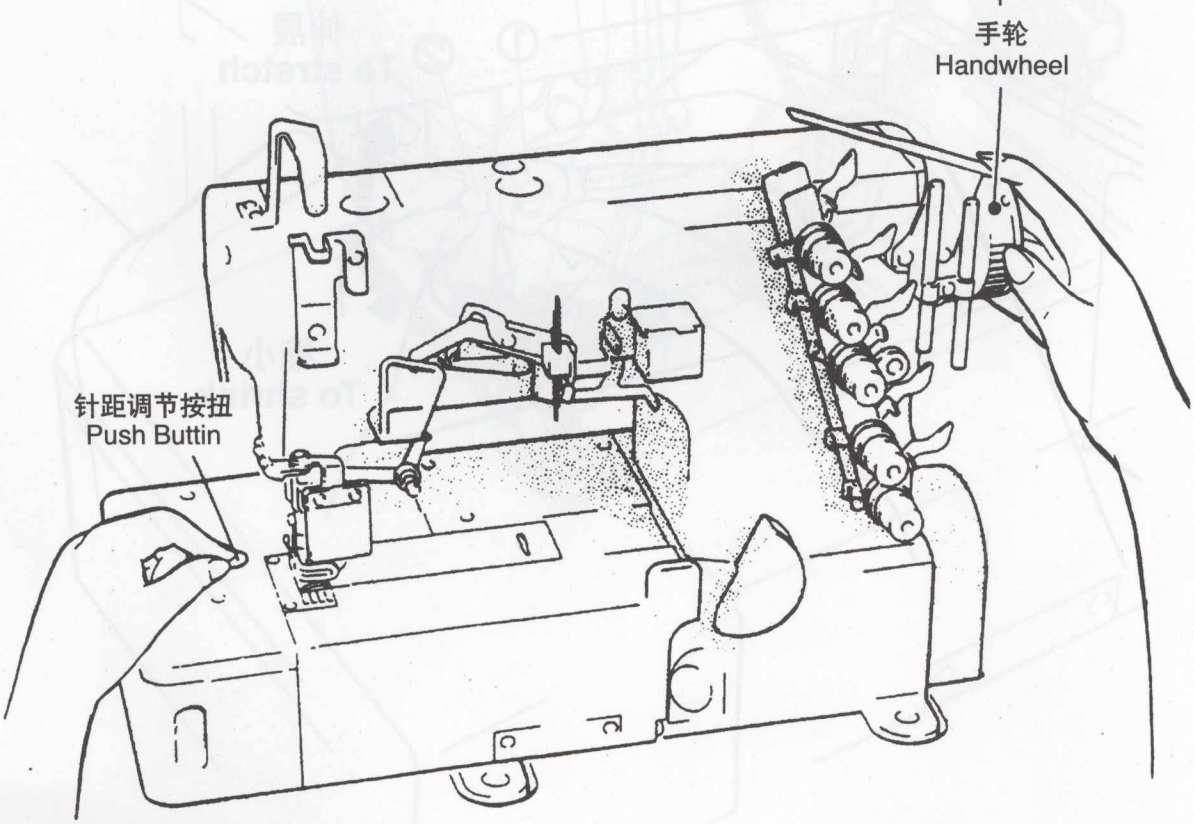

试 缝
TEST SEWING

线状态的调节
Thread tension

线张力状态的调节，请用针线状态螺帽①、上弯针状态螺帽②、弯针线状态调节螺帽③来进行调节。

Mack tension adjustments with the needle thread knob (1), top cover thread knob (2), and looper thread konb (3).

缝纫机的清扫
Cleaning the machine

缝纫机的清扫，以针板槽及送布牙周围为主。

Mainly the slots of the needle plate and the feed rows should be cleaned.

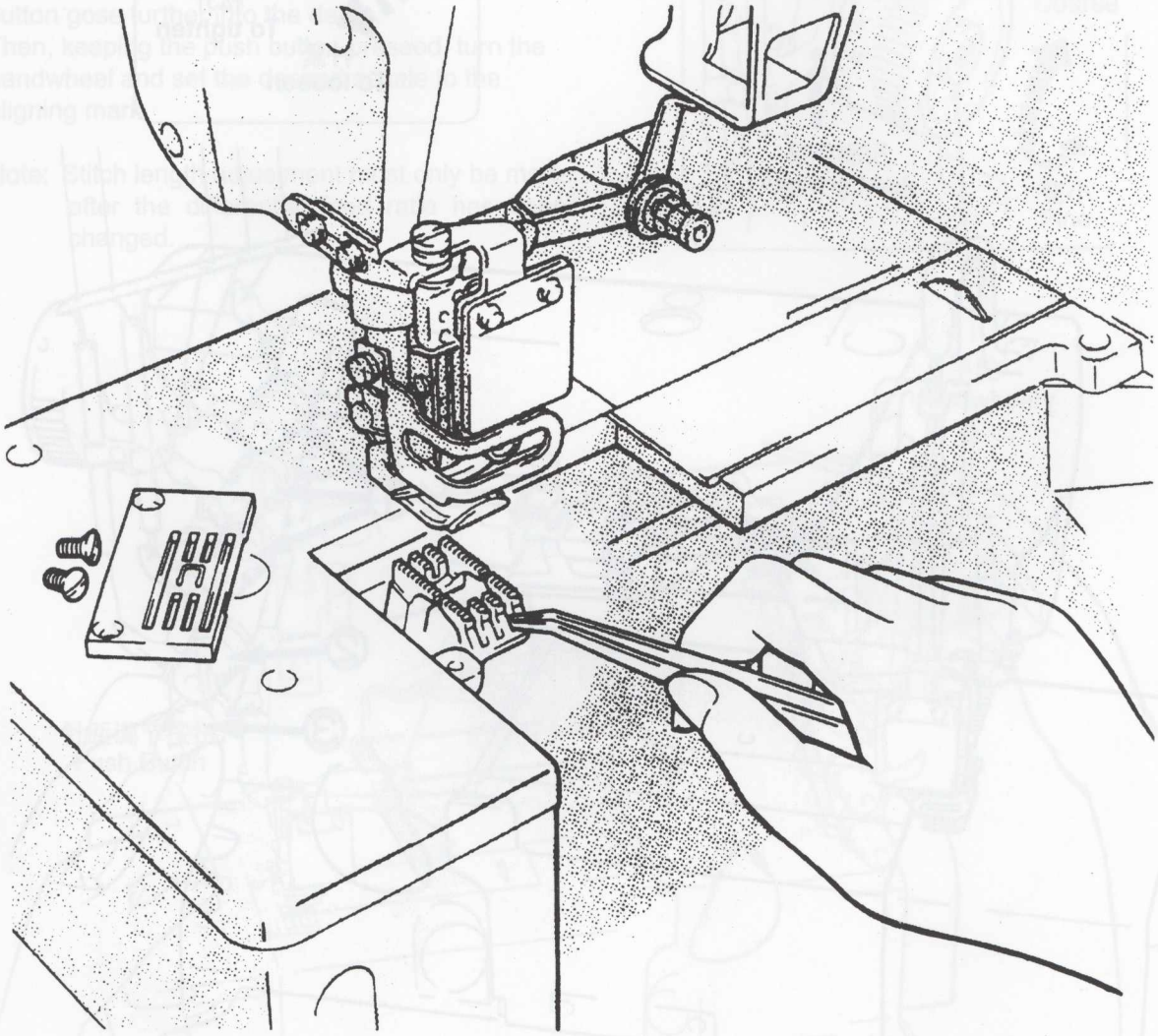

换　针
Replacing the needle

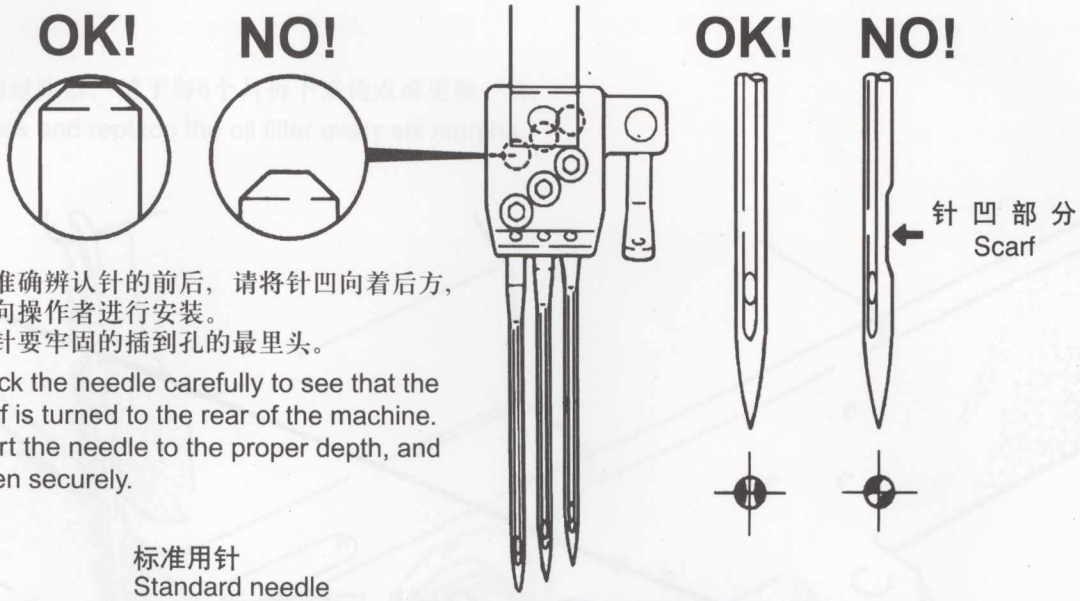

准确辨认针的前后，请将针凹向着后方，即背向操作者进行安装。

针要牢固的插到孔的最里头。

*Check the needle carefully to see that the scarf is turned to the rear of the machine.

*Insert the needle to the proper depth, and fasten securely.

标准用针
Standard needle

	针的尺寸 NEEDLE SIZE	
	2 针 2-needle	3 针 3-needle
风琴牌 UY128GAS Organ UY128GAS 蓝狮牌 UY128GAS Schmetz UY128GAS	# 9	# 10

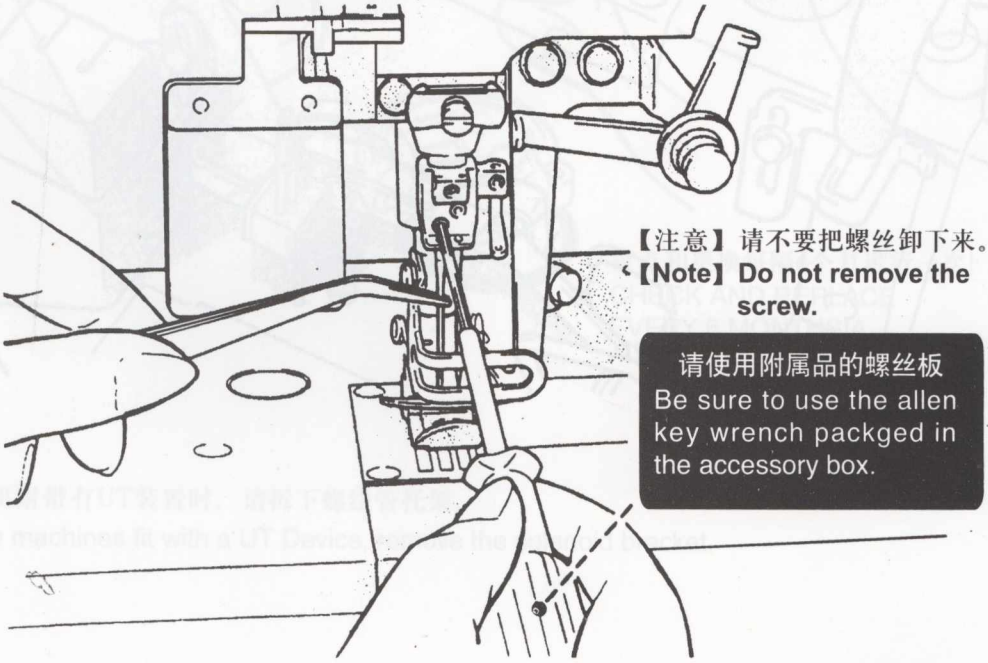

【注意】请不要把螺丝卸下来。

【Note】Do not remove the screw.

请使用附属品的螺丝板
Be sure to use the allen key wrench packged in the accessory box.

检查机油的循环
Checking the oil circulation

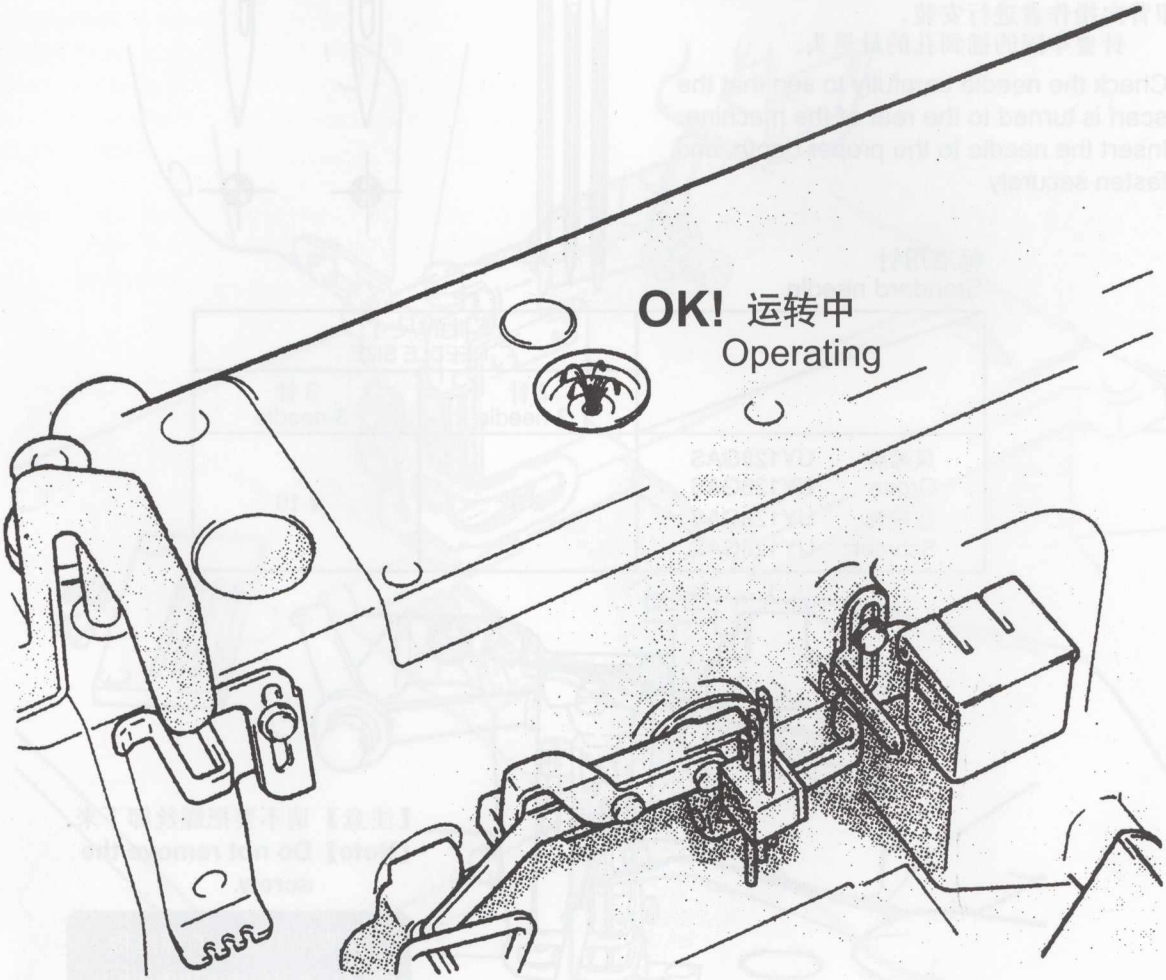

油过滤器的检点与更换
Checking and replacing the oil filter

机油过滤器，请于每6个月拆下来检点或更换一次。
Check and replace the oil filter every six months.

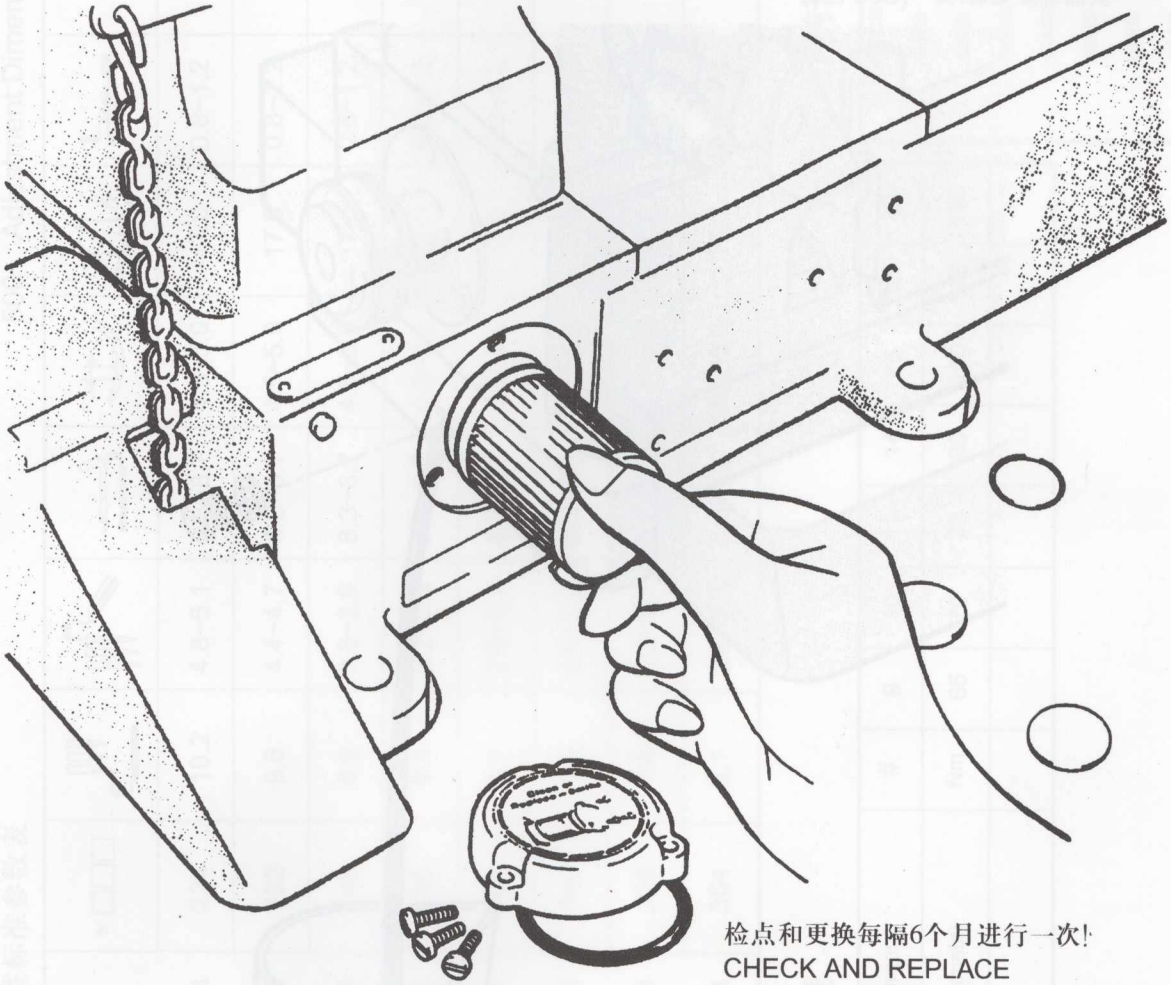

检点和更换每隔6个月进行一次!
CHECK AND REPLACE
EVERY 6 MONTHS!A

注：缝纫机附带有UT装置时，请拆下螺线管托架。
NOTE: On machines fit with a UT Device, remove the solenoid bracket.

换 机 油
Replacing the oil

机油的更换，请在使用开始1个月后更换一次。然后，每6个月更换一次。

Replace the oil one month after the first use and every six months thereafter.

供油请参见第1页 (See P.1)

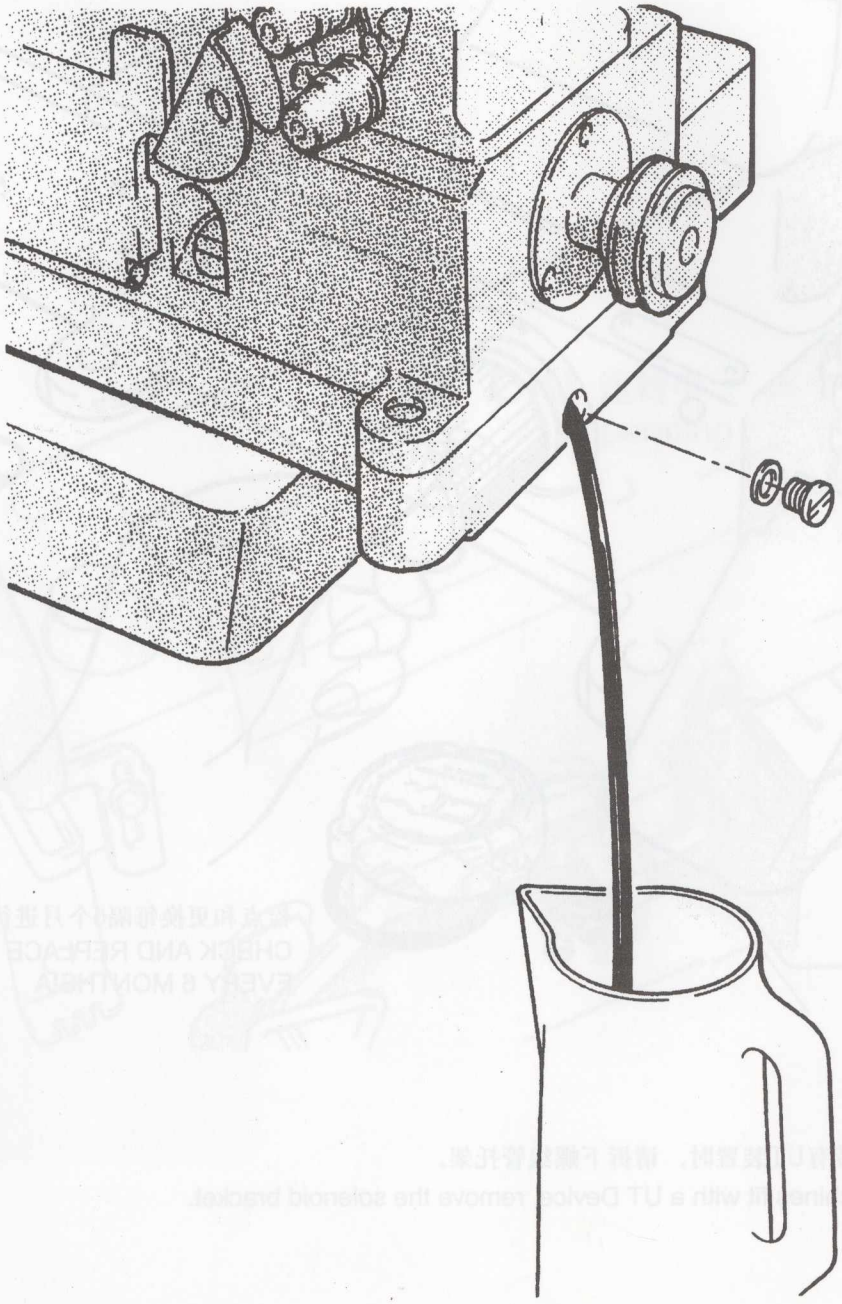

500 调整标准参数表

500 Adjustment Dimensions (mm)

	×□□□								
500-01CB	224	10.2	4.8~5.1	8.3~8.7	4.5~5.0	17.0	0.8~1.2		
02BB	232	9.8	4.4~4.7	8.3~8.7	4.5~5.0	17.0	0.8~1.2		
03EB	248	8.9	3.6~3.9	8.3~8.7	4.5~5.0	17.0	0.8~1.2		
04DB	256	8.5	3.2~3.5	8.3~8.7	4.5~5.0	17.0	0.8~1.2		
05MD	264	8.1	2.8~3.1	8.3~8.7	4.5~5.0	17.0	0.8~1.2		
06HD	348	9.4	3.6~3.9	8.3~8.7	4.5~5.0	17.0	0.8~1.2		
07FD	356	8.5	8.3~8.7	8.3~8.7	4.5~5.0	17.0	0.8~1.2		
08AB	364	8.1	2.8~3.1	8.3~8.7	4.5~5.0	17.0	0.8~1.2		

针号对照表

Japanese size (Organ)	#	9	10	11	14	16	18	21
Metric size (Schmetz)	Nm	65	70	75	90	100	110	130

标准用针

500-01CB 02BB	x□□□	Organ UY128GAS
02EB	224	9S
04DB	232	9S
05MD	248	9S
	256	9S
06HD	264	9S
07FD	348	10S
	356	10S
08AB	364	10S

1 车壳部份 Frane assembly

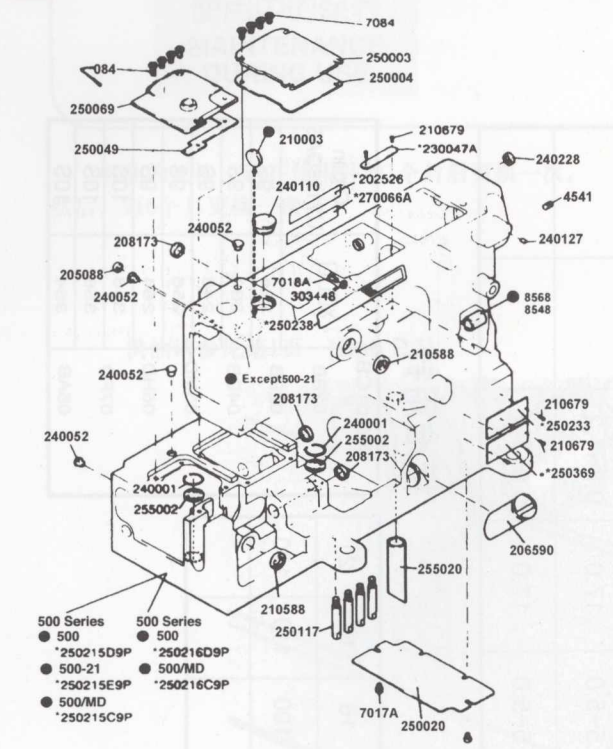

2 罩壳部份 Cover assemblies

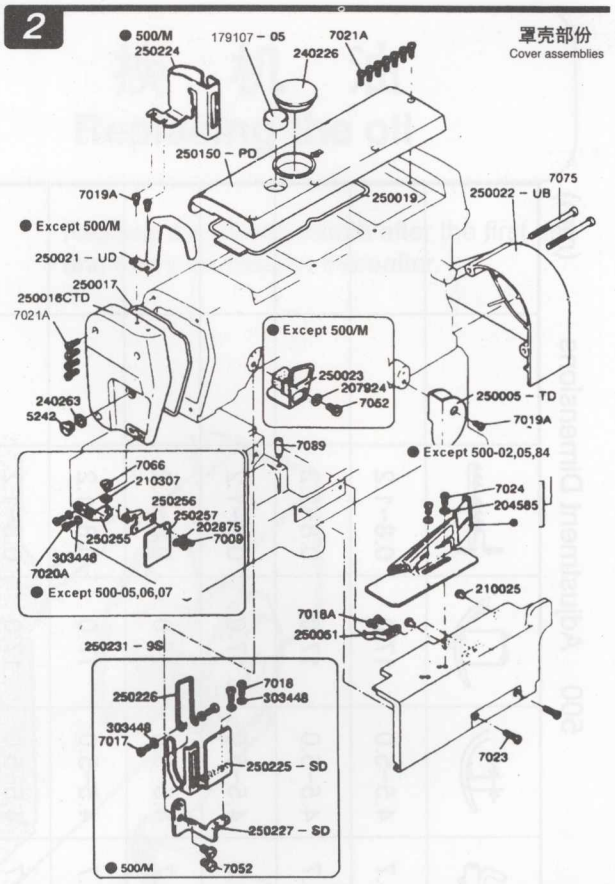

3 缝台部份 Cloth plate assemblies

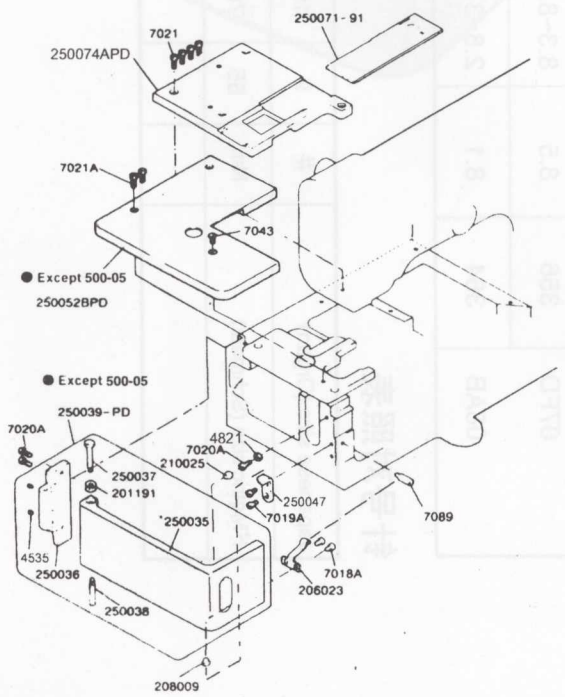

4 下轴部份 Hook.shaft assemblies

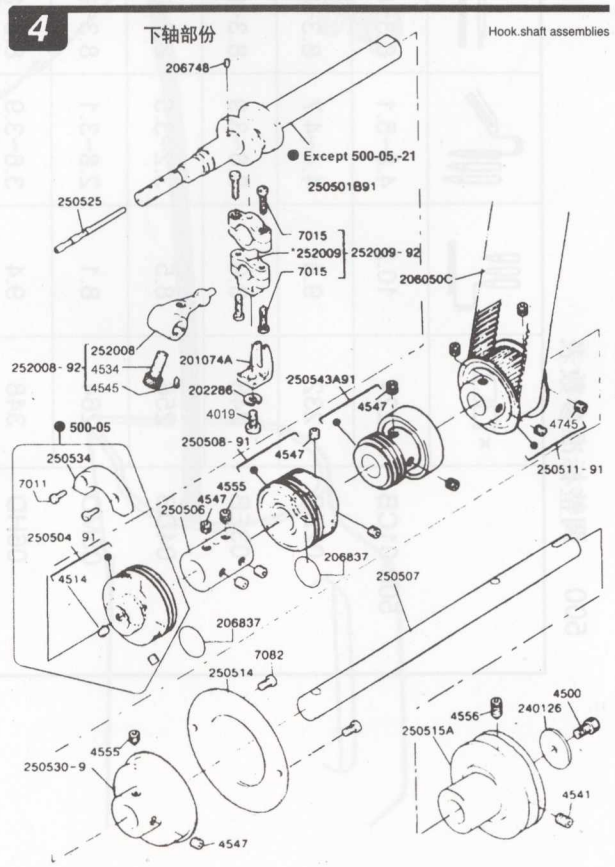

5 上轴部份 Main shaft assemblies

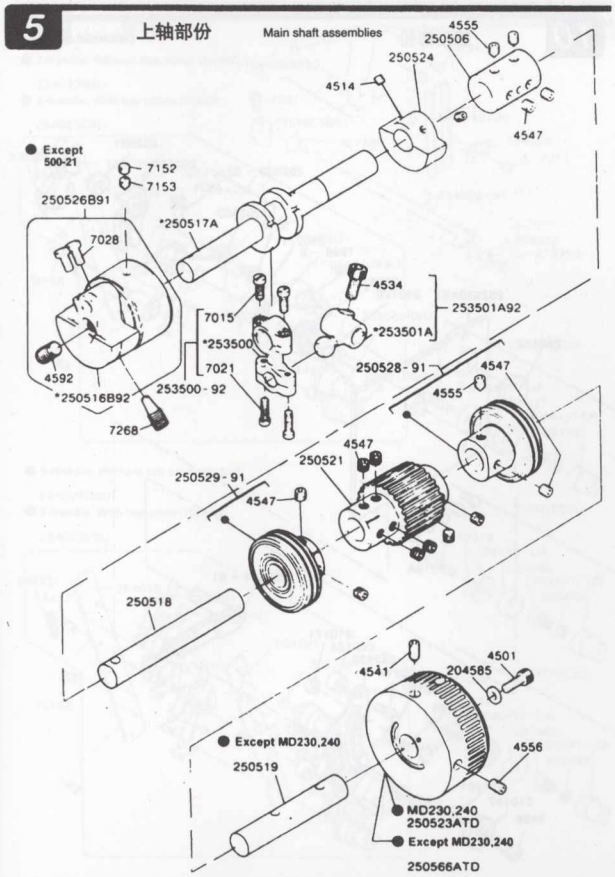

6 针杆部份 Needle bar assemblies

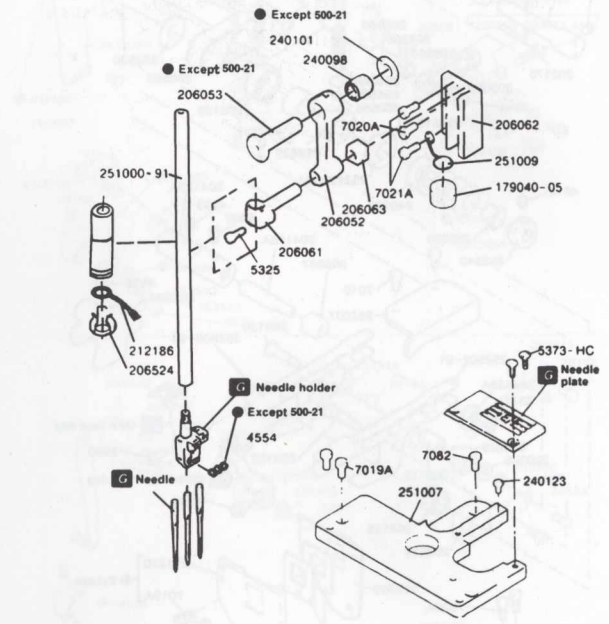

7 护针部份 Needle guard assemblies

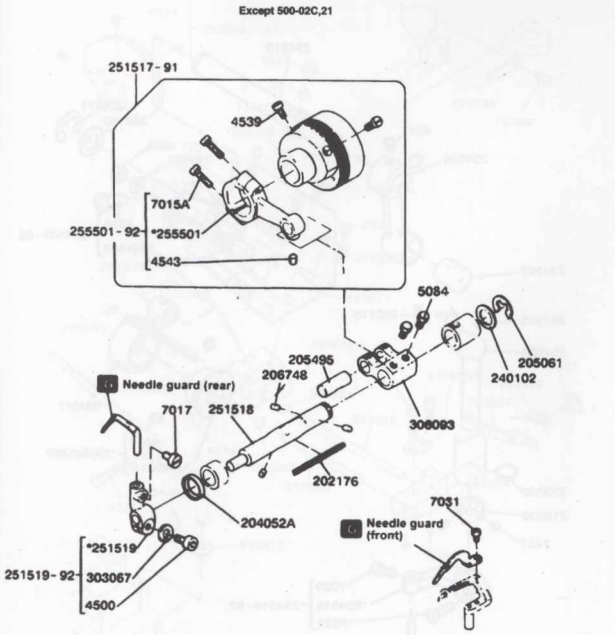

8 弯针部份 Looper assemblies

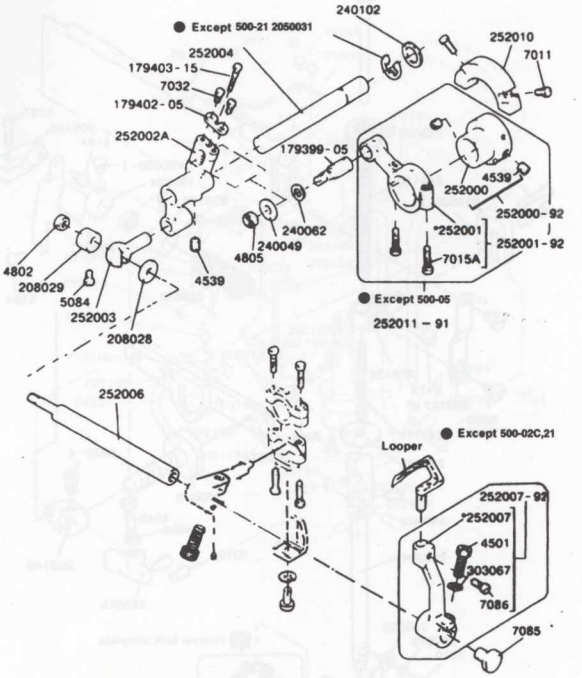

9 牙架部份

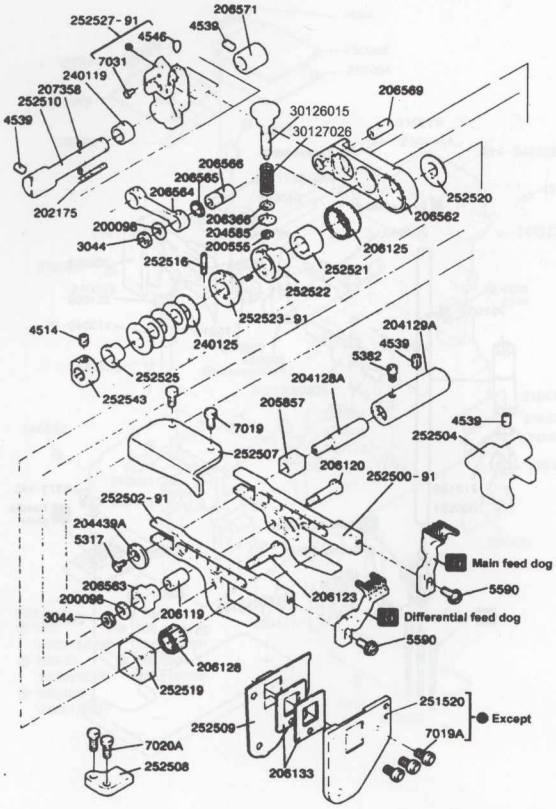

10 差动部份 Differential assemblies

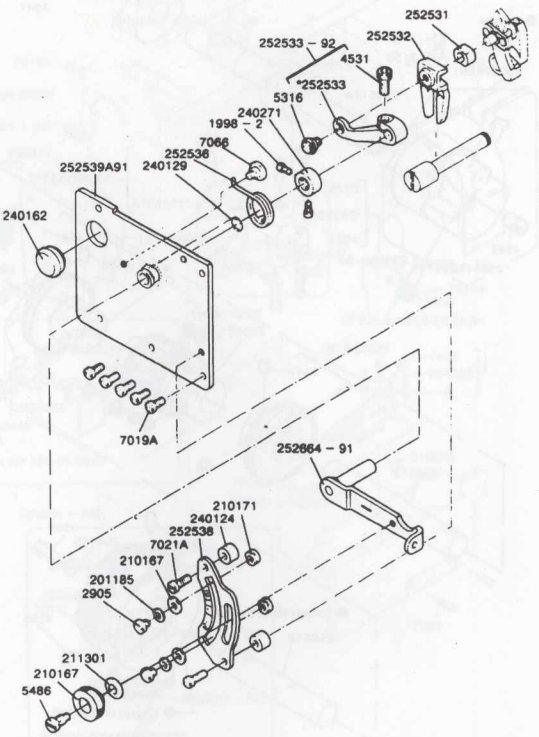

11 压脚部份 Presser form assemblies

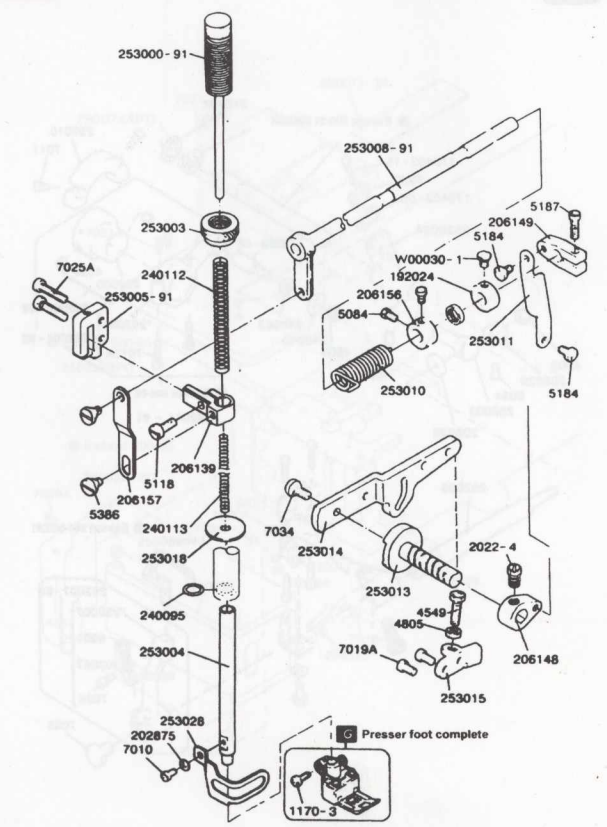

12 喂针部份 Needle feeding assemblies

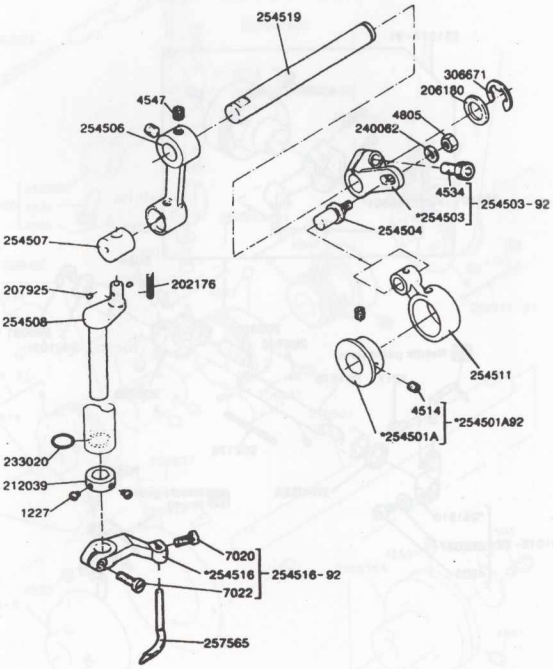

*=(not for sale.)

13 松线部份 Thread loosing assemblies

● 2-Needle, Without top cover thread.
254023B9U
● 2-Needle, With top cover thread.
254023C9U

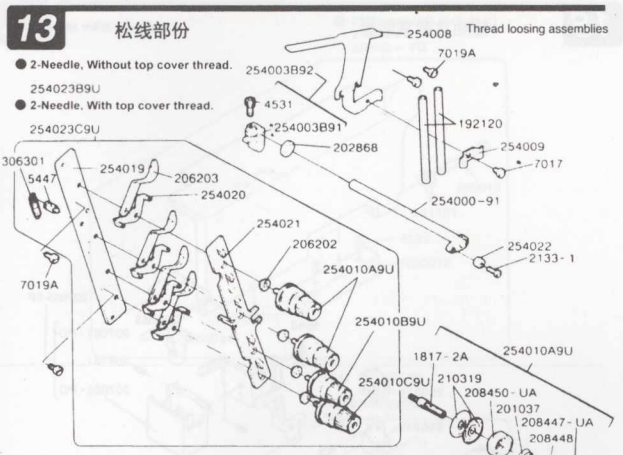

● 3-Needle, Without top cover thread.
254023D9U
● 3-Needle, With top cover thread.
254023E9U

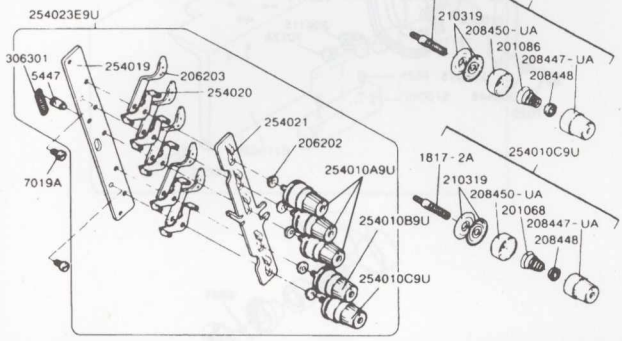

14 过线部份 Thread guide assemblies

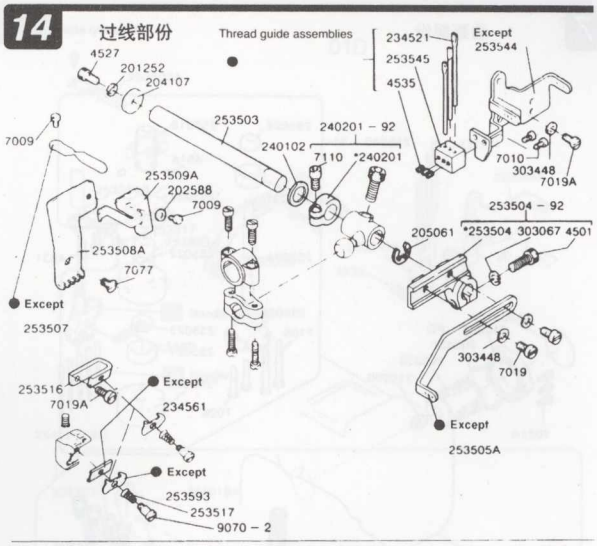

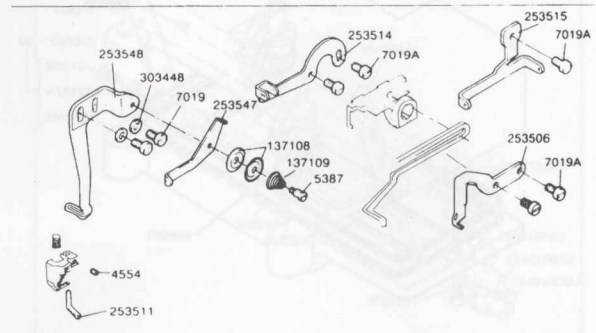

15 过线凸轮部份 Cam assemblies

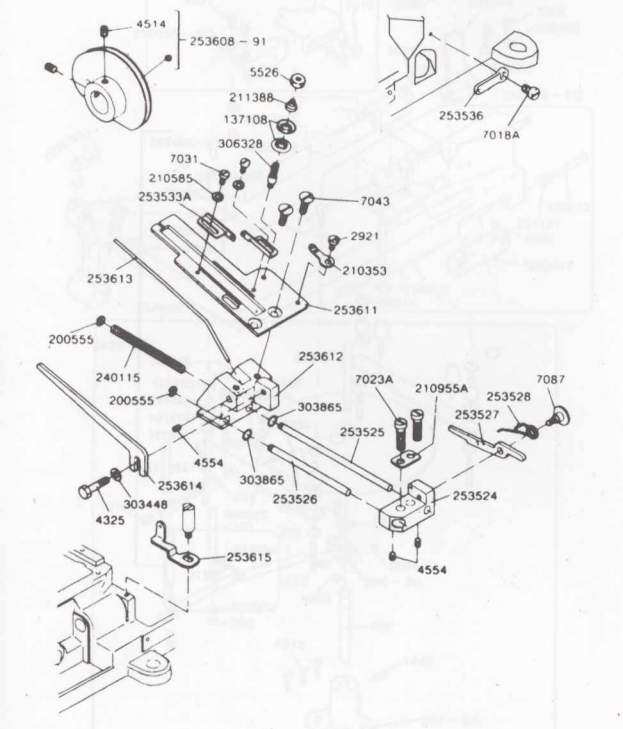

16 润滑部份 Lubricatrion assemblies

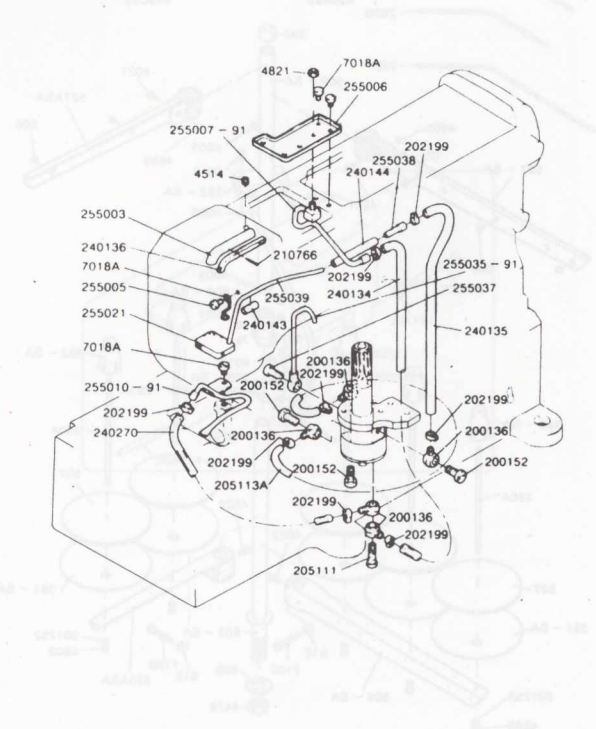

17 油泵部份 Oil pump assemblies

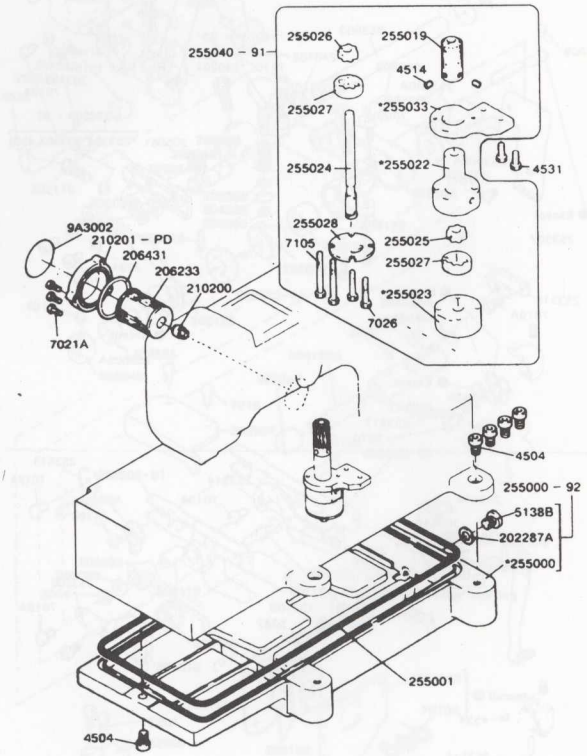

18 硅油盒装置部份 Silicon oil delice assemblies

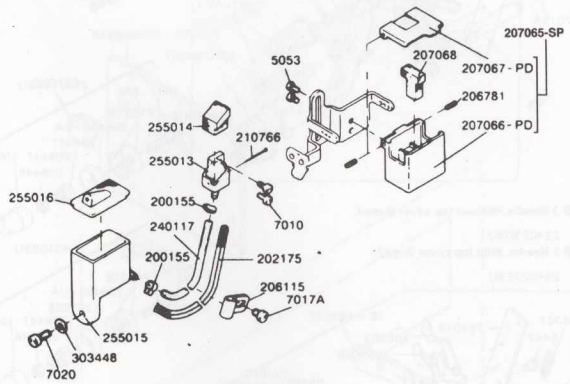

19 线架部份 Thread apool assemblies

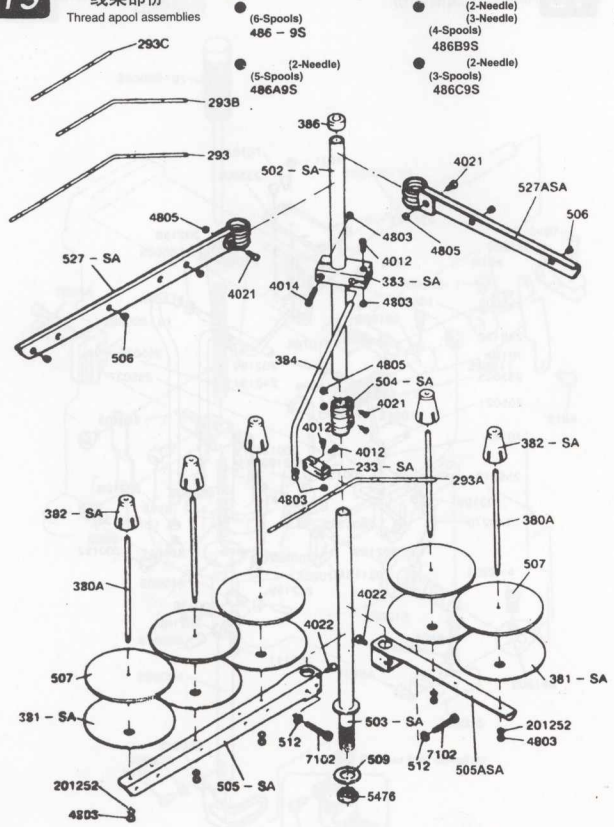

20 油盘托板部份 Oil plate assemblies

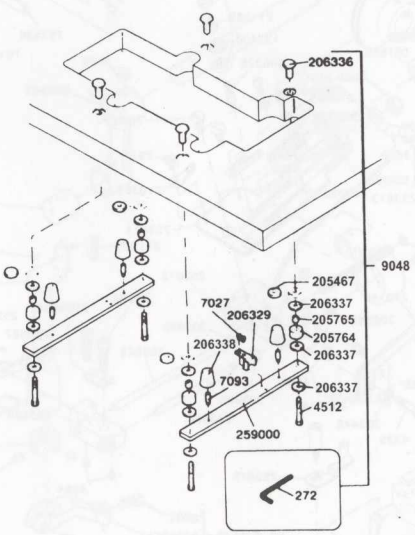

21

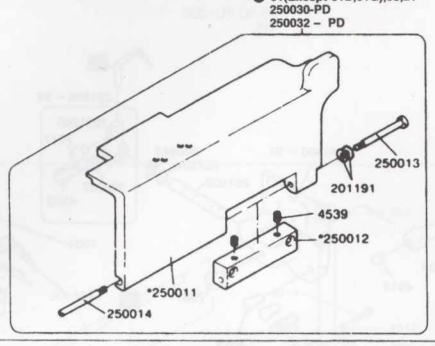

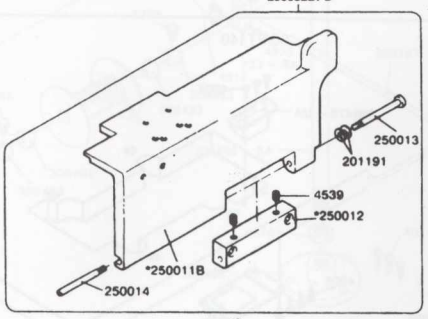

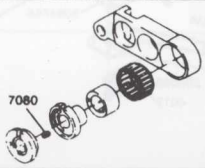

22

01D

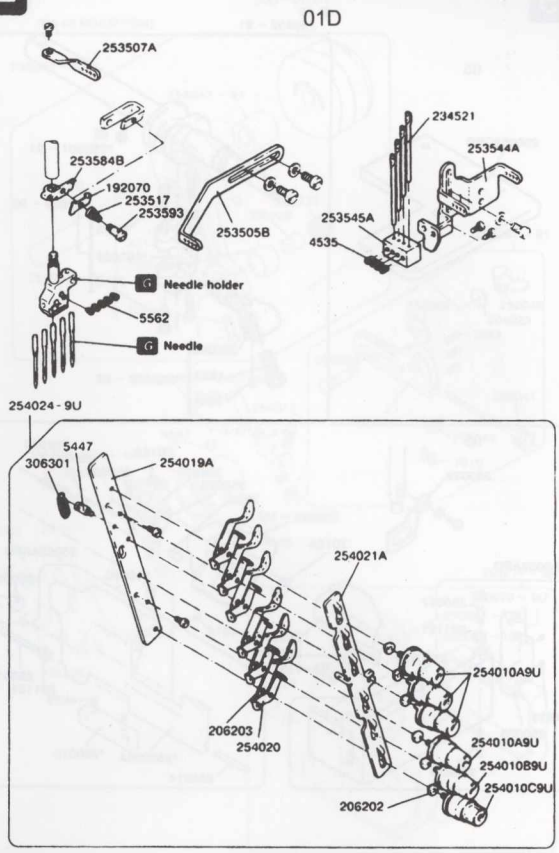

23

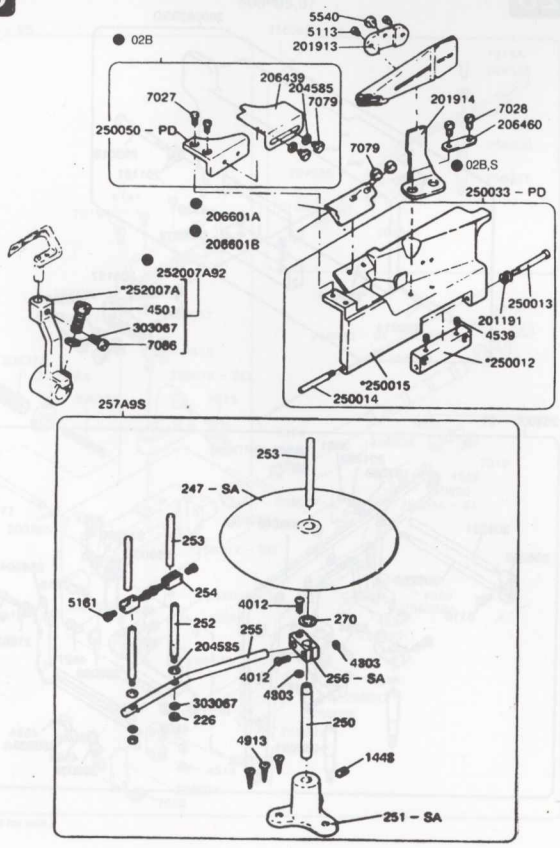

24

03

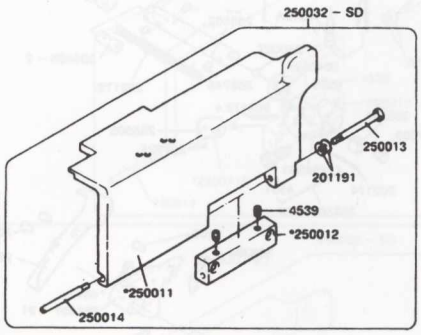

25

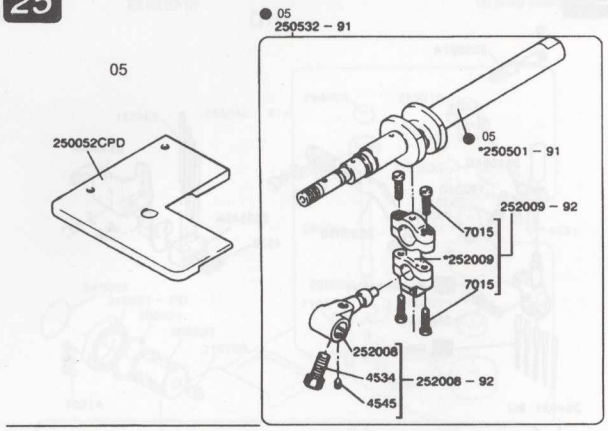
05
250052CPD
● 05
250532 – 91
● 05
*250501 – 91
252009 – 92
7015
*252009
7015
252008
4534
252008 – 92
4545

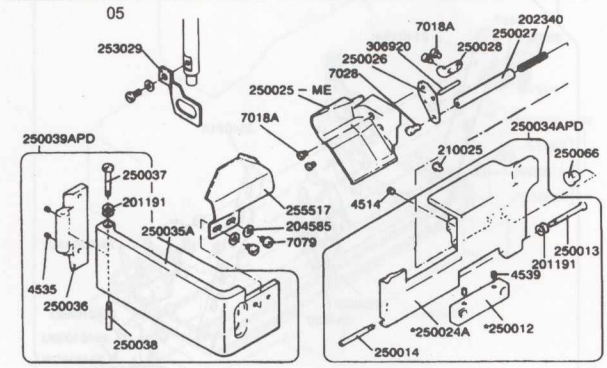
05
253029
7018A
306920
250026
7028
250025 – ME
250027
250028
202340
7018A
250039APD
250037
201191
250035A
255517
204585
7079
4535
250036
250038
250034APD
210025
250066
4514
250013
201191
4539
*250024A
*250012
250014

26

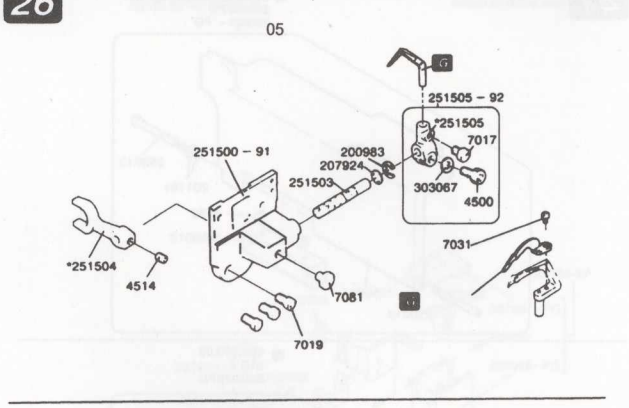
05
251505 – 92
*251505
7017
251500 – 91
200983
207924
251503
303067
4500
7031
*251504
4514
7081
7019

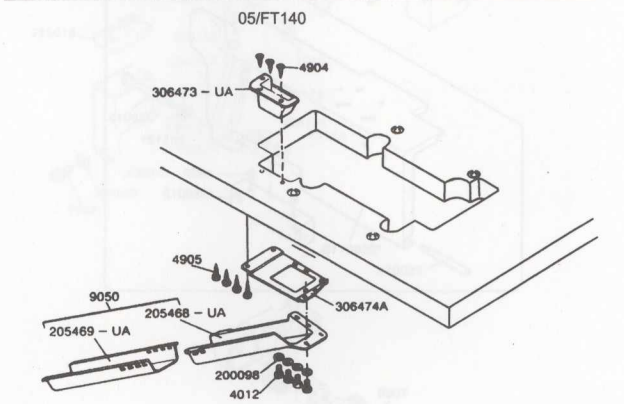
05/FT140
4904
306473 – UA
4905
9050
205468 – UA
306474A
205469 – UA
200098
4012

27

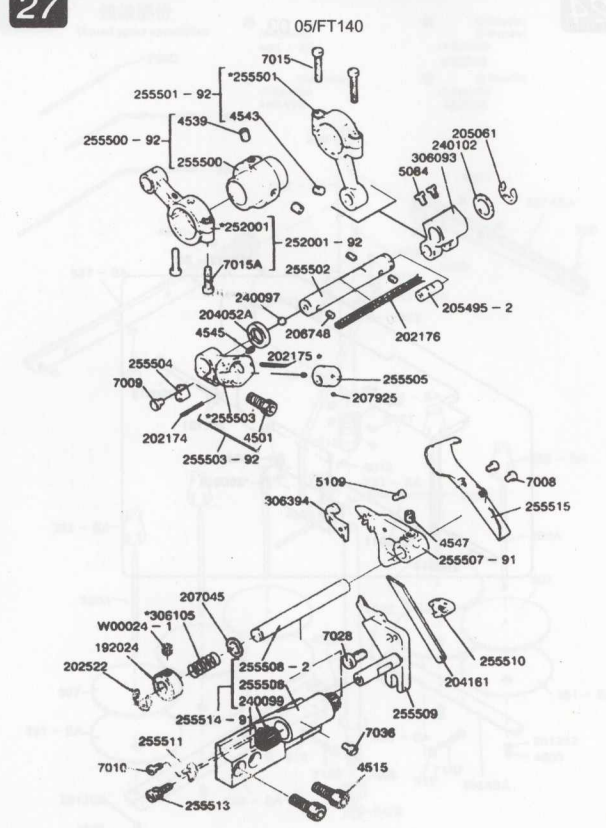
05/FT140
7015
*255501
255501 – 92
4539
4543
255500 – 92
255500
205061
240102
306093
5084
*252001
252001 – 92
7015A
255502
240097
205495 – 2
204052A
206748
202176
4545
202175
255504
255505
7009
207925
*255503
202174
4501
255503 – 92
5109
7008
306394
255515
4547
255507 – 91
207045
*306105
W00024 – 1
192024
7028
202522
255508 – 2
255510
255506
204161
240099
255509
255514 – 9
7036
255511
7010
4515
255513

28

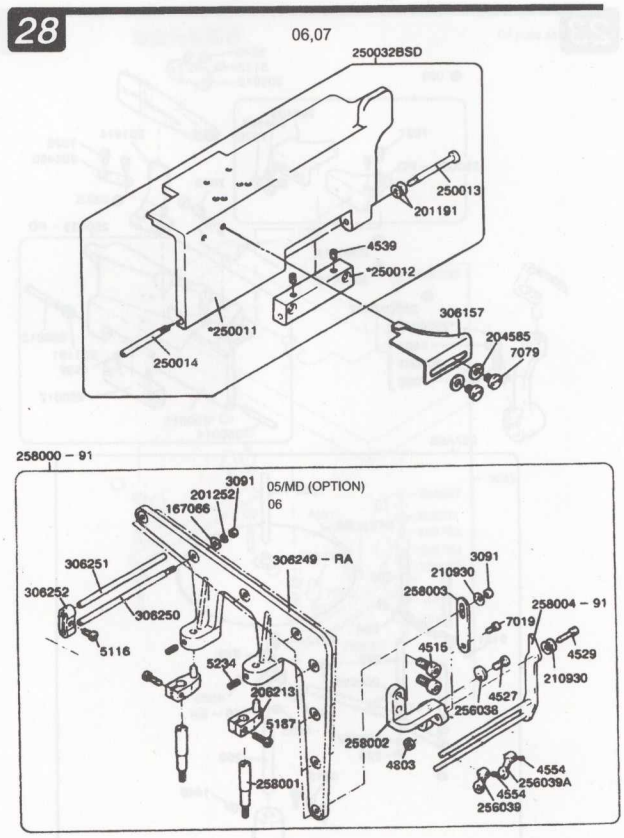
06,07
250032BSD
250013
201191
4539
*250012
306157
*250011
204585
7079
250014
258000 – 91
05/MD (OPTION)
06
3091
201252
167066
306251
306249 – RA
3091
210930
306252
258003
258004 – 91
306250
7019
5116
4515
4529
5234
210930
206213
4527
256038
5187
258002
4803
258001
4554
256039A
4554
256039

29

500-05,06,07

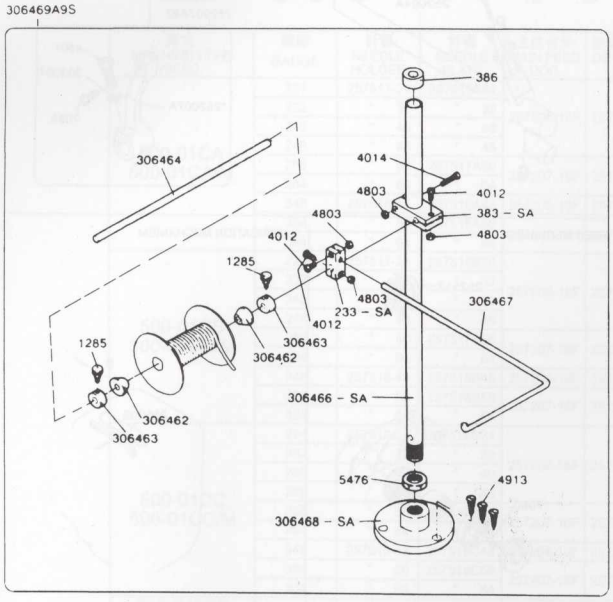

30

500 - 05,07

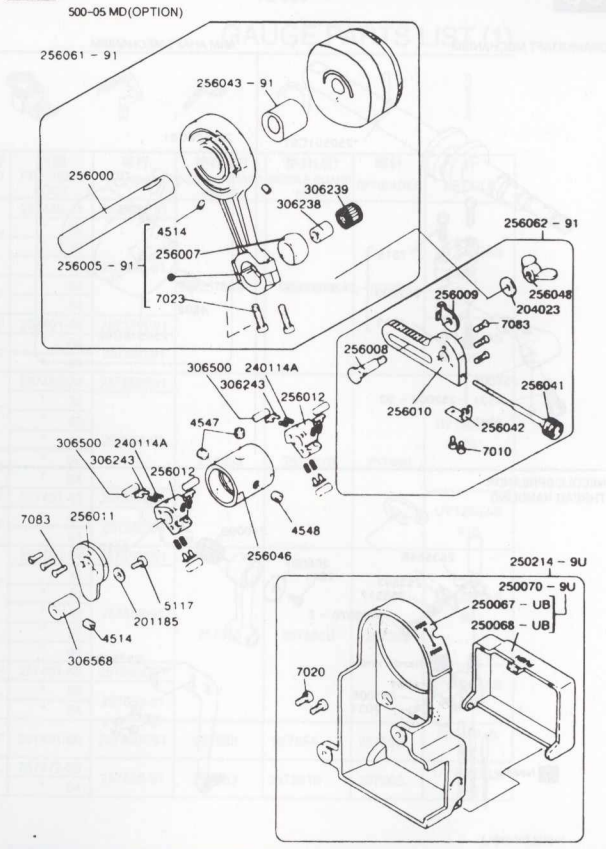

31

500-05,07

500-05MD(OPTION)

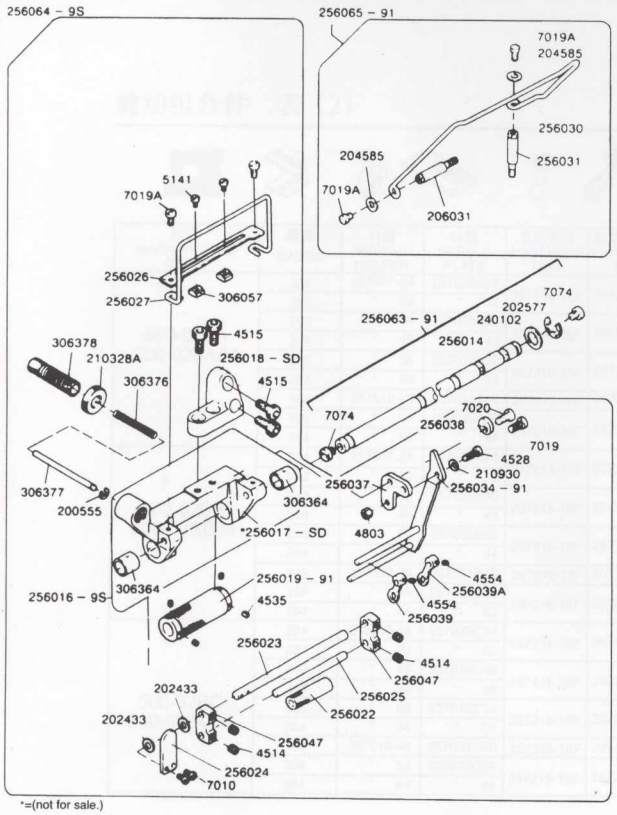

*=(not for sale.)

32

500 - 08

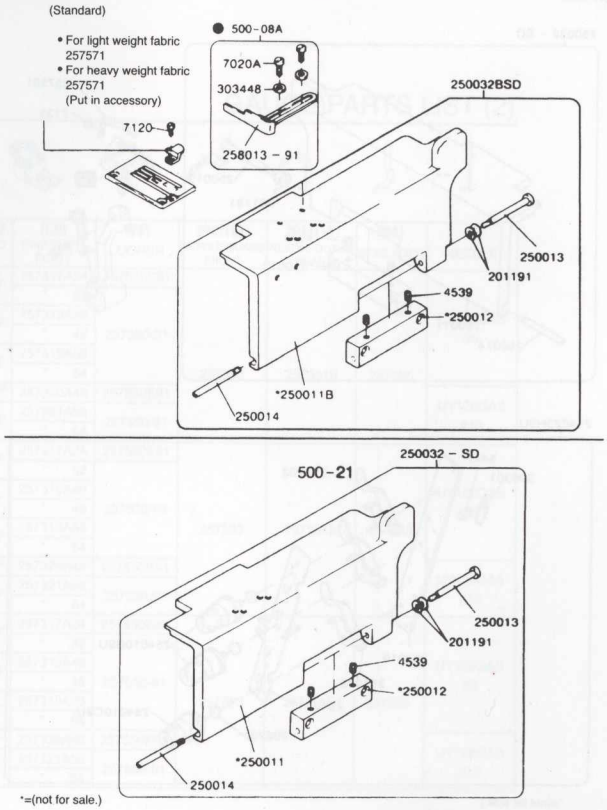

*=(not for sale.)

33

Please confirm the correct part by the gauge parts lists
500-21

CRANKSTAFT MECHANISM

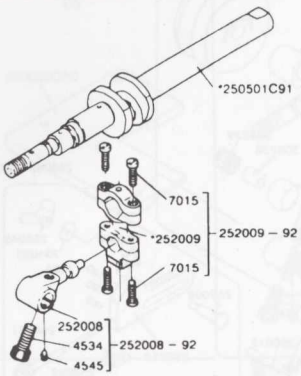

ARM AHAFT MECHANISM

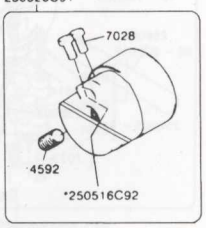

NEEDLE·SPREANDR
THREAD HANDLING

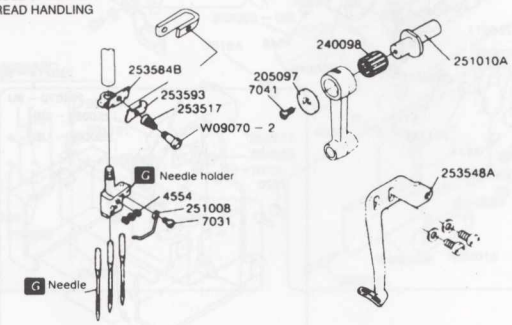

*=(not for sale.)

34

500-21

LOOPER MECHANISM

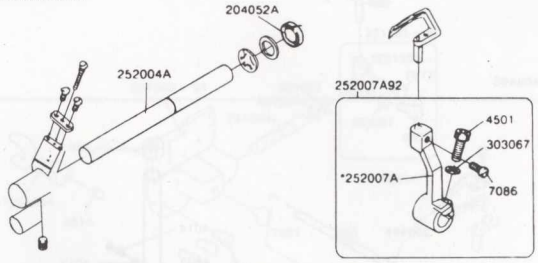

FEED MECHANISM

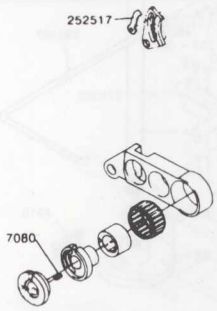

LUBRICATION MECHANISM

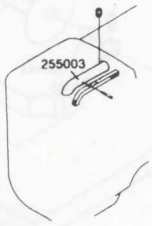

*=(not for sale.)

35

Please confirm the correct part by the gauge parts lists
500-84

250032 – SD

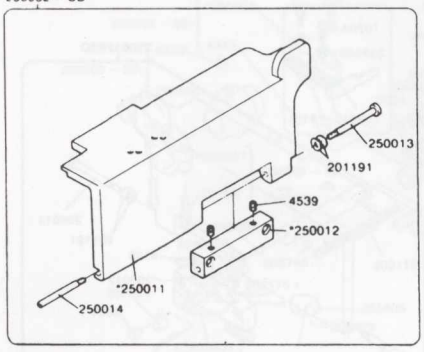

254023H9U

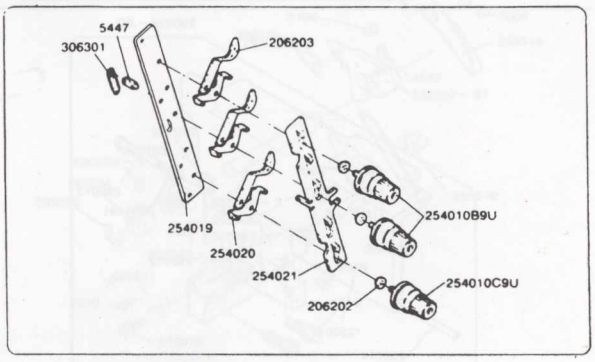

*=(not for sale.)

缝纫组合件 表（1） GAUGE PARTS LIST (1)

形式 MACHINE TYPE /SEEC.	缝样 GAUGE	针留 NEEDLE HOLDER	针板 NEEDLE PLATE	主送布牙 MAIN FEED DOG	差动送布牙 DIFF. FEED DOG	压脚 PRESSER FOOT	弯杆 LOOPER	护针(前) NEEDLE GUARD FRONT	护针(后) NEEDLE GUARD REAR	喂针 SPREADER	针 NEEDLE
500-01CA 500-01CA/M	224	257517-24	257515A24	257206-16F	257258-16F	257460-24	257550E91	257553	257551B	25756S	UY128GAS #9
	232	" 32	" 32			" 32	257550-91				
	240	" 40	" 40			" 40					
	248	" 48	" 48			" 48					
	256	" 56	257517A56	257207-16F	257058-16F	" 56					
	264	" 64	" 64			" 64					
	348	257518-48	257516A48	257206-16F	257258-16F	257461-48	257550E91				UY128GAS #10
	356	" 56	257518A56	257207-16F	257259-16F	" 56	257550-91				
	364	" 64	" 64			" 64					
500-01CB 500-01CB/M	224	257517-24	257515B24	257206-16F	257258-16F	257460-24	257550E91	257553	257551B	25756S	UY128GAS #9
	232	" 32	" 32			" 32	257550-91				
	240	" 40	" 40			" 40					
	248	" 48	" 48			" 48					
	256	" 56	257517B56	257207-16F	257259-16F	" 56					
	264	" 64	" 64			" 64					
	348	257518-48	257516B48	257206-16F	257258-16F	257461-48	257550E91				UY128GAS #10
	356	" 56	257518B56	257207-16F	257259-16F	" 56	257550-91				
	364	" 64	" 64			" 64					
500-01CC 500-01CC/M	224	257517-24	257515C24	257206-16F	257258-16F	257460-24	257550E91	257553	257551B	25756S	UY128GAS #9
	232	" 32	" 32			" 32	257550-91				
	240	" 40	" 40			" 40					
	248	" 48	" 48			" 48					
	256	" 56	257517C56	257207-16F	257259-16F	" 56					
	264	" 64	" 64			" 64					
	348	257518-48	257516C48	257206-16F	257258-16F	257461-48	257550E91				UY128GAS #10
	356	" 56	257518C56	257207-16F	257259-16F	" 56	257550-91				
	364	" 64	" 64			" 64					
500-010DB 500-010DB/M	460	257513-60	257020-60	25723A-16F	257258-16F	257491-60	257550C91	257553	25755A	25756S	SM 1014B #3
500-01GB 500-01GB/M	356	257518-56	257018B56	257207-16F	257259-16F	257472-56	257550-91	257553	257551B	25756S	UY128GAS #10
	364	" 64	" 64			" 64					

缝纫组合件 表（2） GAUGE PARTS LIST (2)

形式 MACHINE TYPE /SEEC.	缝样 GAUGE	针留 NEEDLE HOLDER	针板 NEEDLE PLATE	主送布牙 MAIN FEED DOG	差动送布牙 DIFF. FEED DOG	压脚 PRESSER FOOT	弯杆 LOOPER	护针(前) NEEDLE GUARD FRONT	护针(后) NEEDLE GUARD REAR	喂针 SPREADER	针 NEEDLE
500-02BA 500-02BA/M	224	257517-24	257029A24	257214-16F	257280-16F	257317A24	257550E91	257553	257551B	257565	UY128GAS #9
	232	" 32	" 32			" 32	257550-91				
	240	" 40	257030A40	257215-16F	257281-16F	257318A40					
	248	" 48	" 48			" 48					
	256	" 56	257032A56	257216-16F	257282-16F	257319A56					
	264	" 64	" 64			" 64					
	348	257518-48	257031A48	257215-16F	257281-16F	257320A48	257550E91				UY128GAS #10
	356	" 56	257033A56	257216-16F	257282-16F	257321A56	257550-91				
	364	" 64	" 64			" 64					
500-02BB 500-02BB/M	224	257517-24	257029B24	257214-16F	257280-16F	257317A24	257550E91	257553	257551B	257565	UY128GAS #9
	232	" 32	" 32			" 32	257550-91				
	240	" 40	257030B40	257215-16F	257281-16F	257318A40					
	248	" 48	" 48			" 48					
	256	" 56	257032B56	257216-16F	257282-16F	257319A56					
	264	" 64	" 64			" 64					
	348	257518-48	257031B48	257215-16F	257281-16F	257320A48	257550E91				UY128GAS #10
	356	" 56	257033B56	257216-16F	257282-16F	257321A56	257550-91				
	364	" 64	" 64			" 64					
500-02BC 500-02BC/M	224	257517-24	257029C24	257214-16F	257280-16F	257317A24	257550E91	257553	257551B	257565	UY128GAS #9
	232	" 32	" 32			" 32	257550-91				
	240	" 40	257030C40	257215-16F	257281-16F	257318A40					
	248	" 48	" 48			" 48					
	256	" 56	257032C56	257216-16F	257282-16F	257319A56					
	264	" 64	" 64			" 64					
	348	257518-48	257031C48	257215-16F	257281-16F	257320A48	257550E91				UY128GAS #10
	356	" 56	257033C56	257216-16F	257282-16F	257321A56	257550-91				
	364	" 64	" 64			" 64					

缝纫组合件 表（3） GAUGE PARTS LIST (3)

形式 MACHINE TYPE /SEEC.	缝样 GAUGE	针留 NEEDLE HOLDER	针板 NEEDLE PLATE	主送布牙 MAIN FEED DOG	差动送布牙 DIFF. FEED DOG	压脚 PRESSER FOOT	弯杆 LOOPER	护针(前) NEEDLE GUARD FRONT	护针(后) NEEDLE GUARD REAR	喂针 SPREADER	针 NEEDLE
500-02SA 500-02SA/M	224	257517-24	257023A24	257208-16F	257261-16F	257350-24	257350E91	257553	257551B	25756S	UY128GAS #3
	232	" 32	" 32			" 32	257550-91				
	240	" 40	257024A40	257210-16F	257202-16F	257351-40					
	248	" 48	" 48			" 48					
	256	" 56	257041A56	257210-16F	257262-16F	257358-56					
	264	" 64	" 64			" 64					
	348	257518-48	257040A48	257209-16F	257261-16F	257359-48	257550E91				UY128GAS #10
	356	" 56	257025A56	257210-16F	257262-16F	257352-56	257550-91				
	364	" 64	" 64			" 64					
500-02SB 500-02SB/M	224	257517-24	257023B24	257208-16F	257260-16F	257350-24	257350E91	257553	257551B	25756S	UY128GAS #9
	232	" 32	" 32			" 32	257550-91				
	240	" 40	257024B40	257209-16F	257261-16F	257351-40					
	248	" 48	" 48			" 48					
	256	" 56	257040B56	257210-16F	257262-16F	257358-56					
	264	" 64	" 64			" 64					
	348	257518-48	257041B48	257209-16F	257261-16F	257359-48	257550E91				UY128GAS #10
	356	" 56	257025B56	257210-16F	257262-16F	257352-56	257550-91				
	364	" 64	" 64			" 64					
500-02SC 500-02SC/M	224	257517-24	257023C24	257208-16F	257260-16F	257350-24	257550E91	257553	257551B	25756S	UY128GAS #9
	232	" 32	" 32			" 32	257550-91				
	240	" 40	257024C40	257209-16F	257261-16F	257351-40					
	248	" 48	" 48			" 48					
	256	" 56	257041C56	257210-16F	257262-16F	257358-56					
	264	" 64	" 64			" 64					
	348	257518-48	257040C48	257209-16F	257261-16F	257359-48	257550E91				UY128GAS #10
	356	" 56	257025C56	257210-16F	257262-16F	257352-56	257550-91				
	364	" 64	" 64			" 64					
500-02CA 500-02CA/M	232	257139A32	257139A32	259123-16F	257260-16F	2572448-32	257550-91	257553	257551B	25756S	YU128GAS #10
	240	257140A40	257140A40	259124-16F	257262-16F	257449-40					
500-02CB 500-02CB/M	232	257139B32	257139A32	259123-16F	257260-16F	2572448-32	257550-91	257553	257551B	25756S	YU128GAS #10
	240	257140B40	257140A40	259124-16F	257261-16F	257449-40					
500-02CC 500-02CC/M	232	257139C32	257139A32	259123-16F	257260-16F	2572448-32	257550-91	257553	257551B	25756S	YU128GAS #10
	240	257140C40	257140A40	259124-16F	257261-16F	257449-40					
500-02DB 500-02DB/M	232	257157B32	257157B32	259128-16F	259234-16F	257449-34	257550-91	257553	257551B	25756S	YU128GAS #10

缝纫组合件 表（4） GAUGE PARTS LIST (4)

形式 MACHINE TYPE /SEEC.	缝样 GAUGE	针留 NEEDLE HOLDER	针板 NEEDLE PLATE	主送布牙 MAIN FEED DOG	差动送布牙 DIFF. FEED DOG	压脚 PRESSER FOOT	弯杆 LOOPER	护针(前) NEEDLE GUARD FRONT	护针(后) NEEDLE GUARD REAR	喂针 SPREADER	针 NEEDLE
500-02BA 500-02BA/M	240	257517-40	257087B40	257206-16F	259200-16F	257467-40	257550-91	257553	257551B	257565	UY128GAS #9
	248	" 48	" 48			" 48					
	256	" 56	257089B56	257207-16F	259253-16F	" 56					
	264	" 64	" 64			" 64					
	348	257518-48	257088B48	257206-16F	259200-16F	257468-48	257550E91				UY128GAS #10
	356	" 56	257090B56	257207-16F	259253-16F	" 56	257550-91				
	364	" 64	" 64			" 64					
500-02BB 500-02BB/M	240	257517-40	257087B40	257206-16F	259200-16F	257467-40	257550-91	257553	257551B	257565	UY128GAS #9
	248	" 48	" 48			" 48					
	256	" 56	257089B56	257207-16F	259253-16F	" 56					
	264	" 64	" 64			" 64					
	348	257518-48	257088B48	257206-16F	259200-16F	257468-48	257550E91				UY128GAS #10
	356	" 56	257090B56	257207-16F	259253-16F	" 56	257550-91				
	364	" 64	" 64			" 64					
500-02BC 500-02BC/M	240	257517-40	257091B40	257206-16F	259201-16F	257467-40	257550-91	257553	257551B	257565	UY128GAS #9
	248	" 48	" 48			" 48					
	256	" 56	257093B56	257207-16F	259254-16F	" 56					
	264	" 64	" 64			" 64					
	348	257518-48	257092B48	257206-16F	259201-16F	257468-48	257750E91				UY128GAS #10
	356	" 56	257094B56	257207-16F	259254-16F	" 56	257550-91				
	364	" 64	" 64			" 64					
500-02BC 500-02BC/M	240	257517-40	257091C40	257206-16F	259201-16F	257467-40	257550-91	257553	257551B	257565	UY128GAS #9
	248	" 48	" 48			" 48					
	256	" 56	257093C56	257207-16F	259254-16F	" 56					
	264	" 64	" 64			" 64					
	348	257518-48	257092C48	257206-16F	259200-16F	257468-48	257550E91				UY128GAS #10
	356	" 56	257094C56	257207-16F	259254-16F	" 56	257550-91				
	364	" 64	" 64			" 64					

缝纫组合件 表（5） GAUGE PARTS LIST (5)

形式 MACHINE TYPE /SEEC.	缝样 GAUGE	针留 NEEDLE HOLDER	针板 NEEDLE PLATE	主送布牙 MAIN FEED DOG	差动送布牙 DIFF. FEED DOG	压脚 PRESSER FOOT	弯杆 LOOPER	护针(前) NEEDLE GUARD FRONT	护针(后) NEEDLE GUARD REAR	喂针 SPREADER	针 NEEDLE
500-05BA 500-05BA/M	224	257517-24	257049A24	257220-16F	257266-16F	257327A24	257550E91	257553	257551B	25756S	UY128GAS #3
	232	" 32	" 32			" 32	257550-91				
	240	" 40	257050A40	257221-16F	257267-16F	257328A40					
	248	" 48	" 48			" 48					
	256	" 56	257052A56	257222-16F	257268-16F	257329A56					
	264	" 64	" 64			" 64					
	348	257518-48	257051A48	257221-16F	257267-16F	257330A48	257550E91				UY128GAS #10
	356	" 56	257053A56	257222-16F	257268-16F	257331A56	257550-91				
	364	" 64	" 64			" 64					
500-05BB 500-05BB/M	224	257517-24	257049A24	257220-16F	257266-16F	257327A24	257550E91	257553	257551B	25756S	UY128GAS #9
	232	" 32	" 32			" 32	257550-91				
	240	" 40	257050A40	257221-16F	257267-16F	257328A40					
	248	" 48	" 48			" 48					
	256	" 56	257052A56	257222-16F	257268-16F	257329A56					
	264	" 64	" 64			" 64					
	348	257518-48	257051A48	257221-16F	257267-16F	257330A48	257550E91				UY128GAS #10
	356	" 56	257053A56	257222-16F	257268-16F	257331A56	257550-91				
	364	" 64	" 64			" 64					
500-05SA 500-05SA/M	224	257517-24	257049A24	257220-16F	257266-16F	257327A24	257550E91	257553	257551B	25756S	UY128GAS #9
	232	" 32	" 32			" 32	257550-91				
	240	" 40	257050A40	257221-16F	257267-16F	257328A40					
	248	" 48	" 48			" 48					
	256	" 56	257052A56	257222-16F	257268-16F	257329A56					
	264	" 64	" 64			" 64					
	348	257518-48	257051A48	257221-16F	257267-16F	257330A48	257550E91				UY128GAS #10
	356	" 56	257053A56	257222-16F	257268-16F	257331A56	257550-91				
	364	" 64	" 64			" 64					
500-05SB 500-50SB/M	224	257517-24	257049A24	257220-16F	257266-16F	257327A24	257550E91	257553	257551B	25756S	UY128GAS #9
	232	" 32	" 32			" 32	257550-91				
	240	" 40	257050A40	257221-16F	257267-16F	257328A40					
	248	" 48	" 48			" 48					
	256	" 56	257052A56	257222-16F	257268-16F	257329A56					
	264	" 64	" 64			" 64					
	348	257518-48	257051A48	257221-16F	257267-16F	257330A48	257550E91				UY128GAS #10
	356	" 56	257053A56	257222-16F	257268-16F	257331A56	257550-91				
	364	" 64	" 64			" 64					

缝纫组合件 表（6） GAUGE PARTS LIST (6)

形式 MACHINE TYPE /SEEC.	缝样 GAUGE	针留 NEEDLE HOLDER	针板 NEEDLE PLATE	主送布牙 MAIN FEED DOG	差动送布牙 DIFF. FEED DOG	压脚 PRESSER FOOT	弯杆 LOOPER	护针(前) NEEDLE GUARD FRONT	护针(后) NEEDLE GUARD REAR	喂针 SPREADER	针 NEEDLE
500-05CA 500-05CA/M	224	257517-24	257049A24	257220-16F	257266-16F	257327A24	257550E91	257553	257551B	257565	UY128GAS #9
	232	" 32	" 32			" 32	257550-91				
	240	" 40	257050A40	257221-16F	257267-16F	257328A40					
	248	" 48	" 48			" 48					
	256	" 56	257052A56	257222-16F	257268-16F	257329A56					
	264	" 64	" 64			" 64					
	348	257518-48	257051A48	257221-16F	257267-16F	257330A48	257550E91				UY128GAS #10
	356	" 56	257053A56	257222-16F	257268-16F	257331A56	257550-91				
	364	" 64	" 64			" 64					
500-05CB 500-05CB/M	224	257517-24	257049A24	257220-16F	257266-16F	257327A24	257550E91	257553	257551B	257565	UY128GAS #9
	232	" 32	" 32			" 32	257550-91				
	240	" 40	257050A40	257221-16F	257267-16F	257328A40					
	248	" 48	" 48			" 48					
	256	" 56	257052A56	257222-16F	257268-16F	257329A56					
	264	" 64	" 64			" 64					
	348	257518-48	257051A48	257221-16F	257267-16F	257330A48	257550E91				UY128GAS #10
	356	" 56	257053A56	257222-16F	257268-16F	257331A56	257550-91				
	364	" 64	" 64			" 64					

缝纫组合件 表（7） GAUGE PARTS LIST (7)

形式 MACHINE TYPE /SEEC.	缝样 GAUGE	针留 NEEDLE HOLDER	针板 NEEDLE PLATE	主送布牙 MAIN FEED DOG	差动送布牙 DIFF. FEED DOG	压脚 PRESSER FOOT	弯杆 LOOPER	护针(前) NEEDLE GUARD FRONT	护针(后) NEEDLE GUARD REAR	喂针 SPREADER	针 NEEDLE
500-06BA 500-06BA/M 500-07BA 500-07BA/M	232	257517-32	257044A32	257214-16F	257260-16F	257337A32	257550-91	257553	257551B	25756S	UY128GAS #9
	240	" 40	257045A40	257215-16F	257261-16F	257338A40					
	248	" 48	" 48			" 48					
	256	" 56	257047A56	257216-16F	257262-16F	257339A56					
	264	" 64	" 64			" 64					
	348	257518-48	257046A48	257215-16F	257261-16F	257339A48	257550E91				UY128GAS #10
	356	" 56	257048A56	257216-16F	257262-16F	257341A56	257550-91				
	364	" 64	" 64			" 64					
500-06BB 500-06BB/M 500-07BB 500-07BB/M	232	257517-32	257044B32	257214-16F	257260-16F	257337A32	257550-91	257553	257551B	25756S	UY128GAS #9
	240	" 40	257045B40	257215-16F	257261-16F	257338A40					
	248	" 48	" 48			" 48					
	256	" 56	257047B56	257216-16F	257262-16F	257339A56					
	264	" 64	" 64			" 64					
	348	257518-48	257046B48	257215-16F	257261-16F	257339A48	257550E91				UY128GAS #10
	356	" 56	257048B56	257216-16F	257262-16F	257341A56	257550-91				
	364	" 64	" 64			" 64					
500-08AB 500-08AB/M	240	257517-40	257084B40	257206-16F	259209-16F	257480-40	257550-91	257553	257551B	25756S	UY128GAS #9
	248	" 48	" 48			" 48					
	356	257518-56	257095B56	257207-16F	259210-16F	257461-56					UY128GAS #10
	364	" 64	" 64			" 64					
500-08AC 500-08AC/M	240	257517-40	257084C40	257206-16F	259209-16F	257160-48	257550-91	257553	257551B	25756S	UY128GAS #9
	248	" 48	" 48			" 48					
	256	257518-56	257095C56	257207-16F	259210-16F	257461-56					UY128GAS #10
	364	" 64	" 64			" 64					

缝纫组合件 表（8） GAUGE PARTS LIST (8)

形式 MACHINE TYPE /SEEC.	缝样 GAUGE	针留 NEEDLE HOLDER	针板 NEEDLE PLATE	主送布牙 MAIN FEED DOG	差动送布牙 DIFF. FEED DOG	压脚 PRESSER FOOT	弯杆 LOOPER	护针(前) NEEDLE GUARD FRONT	护针(后) NEEDLE GUARD REAR	喂针 SPREADER	针 NEEDLE
500-21BA 500-21BA/M	356	257501C58	257022A56	257207-16F	257259-16F	257466-56	257550A91	257553	257551B	257565	UY128GAS #10
	364	" 64	" 64			" 64					
500-21BB 500-21BB/M	356	257501C56	257022B56	257207-16F	257259-16F	257466-56	257550A-91	257553	257551B	257565	UY128GAS #10
	364	" 64	" 64			" 64					
50082AB/M	224	257517-24	257119-24	257206-16F	257223-16F	257460-24	257550E91	257553	257551B	257565	UY128GAS #10
	240	" 40	" 40			" 40	257550-91				
	248	" 48	" 48			" 48					
	356	257518-56	257120-56	257207-16F	257224-16F	257461-56					UY128GAS #10
	364	" 64	" 64			" 64					

500N系列子型号规格表

500N系列

用途	子型号	针数 (根)	针数 (根)	针距(mm)	最大针脚长 (mm)	差动比	压脚抬升量 (mm)	最高旋转数 (rpm)	备考
基本缝纫用	500-01CB	2 3	4 5	2.4・3.2・4・4.8・5.6・6.4 4.8・5.6・6.4	4.4	0.5～1.3	6.3 5	6,000	
松紧带滚边用	500-02BB	2 3	4 5	2.4・3.2・4・4.8・5.6・6.4 4.8・5.6・6.4	4.4	0.5～1.3	6.3 5	6,000	
绷盖缝用	500-03DB	2 3	4 5	4・4.8・5.6・6.4 4.8・5.6・6.4	4.4	0.5～1.3	6.3 5	6,000	
	500-03EB	2 3	4 5	4・4.8・5.6・6.4 4.8・5.6・6.4	4.4	0.5～1.3	6.3 5	6,000	
缝花边松紧带用	500-05CB	2 3	4 5	2.4・3.2・4・4.8・5.6・6.4 4.8・5.6・6.4	4.4	0.5～1	6.3 5	5,500 (MMD 5,000)	
	500-07BB	2 3	4 5	3.2・4・4.8・5.6・6.4 4.8・5.6・6.4	4.4	0.5～1.3	6.3 5	5,000	
缝花边用	500-06BB	2 3	4 5	3.2・4・4.8・5.6・6.4 4.8・5.6・6.4	4.4	0.5～1.3	6.3 5	6,000	
下摆折缝用	500-08AB	2 3	4 5	4・4.8 5.6・6.4	4.4	0.5～1.3	6.3 5	6,000	

※差动比使用1:1.3以上时，请将主送布牙运动量设定在3.2mm以下、

针脚形式	602, 605	干燥时重量	41.5Kg
使用的针	UY128GAS #9S UY128GAS #10S	总重量	47.5Kg UY128GAS #10S
整机尺寸(WxDxH)	W: 495mm D: 2801mm H: 414mm	噪音值	n=5.400rpm: Lpa≤82.0dB DIN 45635 48A-1 遵循

Scan by zhuravli.pro
2022

浙江宝宇缝纫机股份有限公司
ZHEJIANG BAOYU SEWING MACHINE CO.,LTD.

中国浙江省台州市椒江区洪家街道经中路2299#
No.2299, Jingzhong Road, Hongjia Street, Jiaojiang, Taizhou, Zhejiang, China.

T. 0086-576-88159688 F. 0086-576-88159666
E. baoyu@chinabaoyu.com

www.chinabaoyu.com

节能伺服电机
Energy-Efficient Motors

电子使用手册
Electronic Manual Book

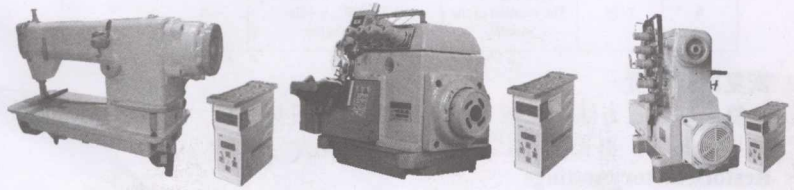

为了安全的使用，请您在使用之前一定阅读本使用说明书。
Please read the manual carefully before using this unit.
另外，请您注意保管本使用说明书，以便随时查阅。
Please keep this manual handy for ready reference.

系统界面连接和操作面板示意图如下：
Introduce for control panel

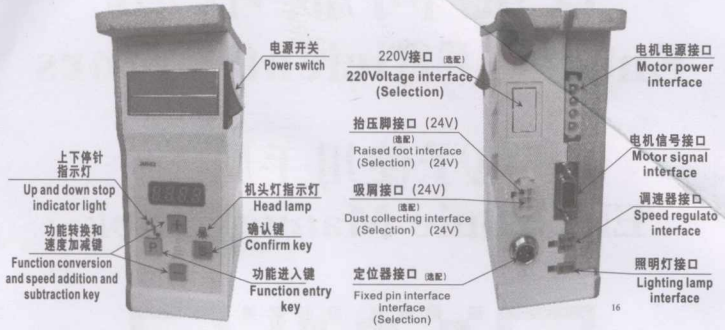

电机常用参数设置　**Commonly used parameter setting**

序号 The serial number	参数编号 Parameters name	参数名称 The parameters name	参数范围 Adjusting rang		出厂设置 The factory reset settings	备注 Remark
1	P-01	最大速度锁定 Maximum Speed lock	200-6500RPM		4500 转	
2	P-02	电机方向 Direction of rotation	0 是逆时针 0 is reverse turn needle	1 是顺时针 1 is clockwise turn	1	
3	P-04	起缝速度 Start sewing speed	200-800 转		250 转	
4	P-05	加速快慢 Speed up And slow	2000-4000 转		3000 转	
5	P-06	定针缝 Set the seam	0-999 针		0	
6	P-15	是否检测上针位 The location of the needle	1:检测针位，0:不检测 1:detecting needle 0:no detection		1	

恢复出厂设置

恢复出厂设置方法：先按“P”键不放，同时按“+”号键，此时画面会显示 P-00，再长按“S”键约 3 秒即可。

Restore factory settings

Restore factory settings: Press the “P” key, no leave, and press the “+” key, the screen will display the P-00, then press “S” key 3 seconds.

更多参数请扫二维码获取

宝宇缝纫机

BAOYU Sewing machine

合格证

CERTIFICATE

型 号 MODEL	GT-500D-01
校 车 ADJUSTMENT	001
检验员 PASSED BY	检 5
机 号 MFG. NO	210307903